Excerpts from

PROCESSES IN BIOLOGICAL VISION:

including,

ELECTROCHEMISTRY OF THE NEURON

This material is excerpted from the full β-version of the text. The final printed version will be more concise due to further editing and economical constraints. A Table of Contents and an index are located at the end of this paper.

James T. Fulton
Vision Concepts

jtfulton@neuronresearch.net

April 30, 2017

13 Secondary Signal Processing–within the retina [1]

This Chapter will focus on the manipulation of the signal information in the visual system from the output voltage node of the photoreceptor cells to the input of the cognitive circuits of the cerebral cortex.. However, to understand the operation, and specifically the signal manipulation function, of the visual system, it is necessary to also address the spatio-temporal modulation introduced into the system by the tremor found primarily in the chordate eye. This element of vision will be discussed in **Section 13.7**.

The material will apply to all animals in concept and plan. However, the signal manipulation tends to become more complex with progression from *Arthropoda* to the *Mollusca* to *Chordata*. There is one exception, the processing of polarization signals tends to be less important in Chordata than in the other phyla. Signal manipulation also tends to become more complex in the more sophisticated animals of each Phylum. This Chapter will not address the signal projection function found primarily in *Chordata*. That function will be addressed in **Chapter 14**. Neither will it address signal manipulation as a function of time. That manipulation is related primarily to the more advanced members of *Chordata*, involves an active external servomechanism (external feedback), and requires an appreciation of secondary, tertiary and higher level processing for its understanding. The more complex aspects of temporal signal manipulation, as encountered in the servomechanisms of the eye, will be discusses in **Chapter 15.** The temporal signal manipulation within the cortex proper will be left to other authors.

Signal manipulation is a prominent feature of the retina in *Chordata*. Since the retina is a subdivision of the brain itself, this portion of the retina gives some insight into the signal manipulation carried out in other sectors of the brain.

The division between signal detection and signal manipulation needs to be precisely defined. The output of the signal detection function occurs at the voltage node of the distribution amplifier within the photoreceptor cell. This electrical node is the primary functional feature of the pedicle of the photoreceptor cell. The voltage at this node is the logarithm of the current through the node impedance. The average voltage at these nodes is controlled by the adaptation amplifiers. It is a constant for all nodes within the photopic visual regime and decreases with illumination in both the mesopic and scotopic illumination regimes.

The division between signal manipulation and signal projection also needs to be precisely defined in the more advanced animals. There are cases where the input structure of the ganglion cells incorporate some analog signal processing functions but the output structure is always entirely binary in operation. In these cases, the dividing line between signal manipulation and signal projection must be defined in terms of the Activa within the ganglion cell. Generally the emitter to base circuit of the Activa is associated with the signal manipulation function. The collector to base circuit is associated with the signal projection function.

The original plan for this Chapter was to define a “fundamental signal path” through the secondary signal manipulation process to aid in the understanding of the actual and more complicated processes. Later, it became clear that such a simple signal path did in fact occur within the actual visual system of both the simpler members of *Arthropoda* and the most sophisticated members of *Chordata*. In Chordata, the unique signal paths related to the foveola are very similar to the envisioned “fundamental signal path.” The signal path between the foveola and the Pretectum of the brain, along with the neuro-motor circuits of the eye, is key to the ability of human to ***read*** and to perform other precise perceptual functions.

The concept of a fundamental signal path is still critical to the understanding of the immensely complicated interconnections found in the retina of *Chordata*. This Chapter will only address a half dozen of the great variety of signal paths through the retina. In addressing these paths, it becomes clear that some paths are used more extensively in some animals than in human. The reader is cautioned about relating his observations concerning the performance of his own visual system to the material in this Chapter until having read **Chapters 13-15** of this work.

In exploring the signaling paths through the retina, it becomes clear that there are two primary analog signaling regimes. The first involves the sending of signals describing the amplitude of a single quantity or the sum of several quantities. The second involves sending signals describing the difference in amplitude between two quantities.

---

[1]Released: April 30, 2017

2 Processes in Biological Vision

These are fundamentally separate regimes. The first is monophasic in the sense that the "signal information" is always positive going relative to the null condition even though the electrical polarity of the signaling medium may be defined as inverted or negative going. On the other hand, the difference in amplitude between two quantities is an inherently biphasic signal. The recognition of the monophasic and biphasic conditions plays a critical role in understanding the perception and cognition functions performed later in the signaling process.

It has also become useful to describe three separate and distinct signal processing matrices in the nominal eye of *Chordata*. The first has been labeled the luminance processing matrix. It can be related morphologically to a "straight through" signal path. This matrix is involved with the summation of monophasic signals and outputs monophasic signals. The other two matrices involve "lateral" signaling paths since they are involved with the formation of difference signals derived from adjacent fundamental signals. The 1st lateral matrix is concerned with differencing of the raw signals from the photoreceptor cells. It is involved with the generation of signals describing the chromatic and polarization environment imaged by the eye. The 2nd matrix is concerned with differencing the signals that have already been summed in the luminance processing matrix. This matrix is involved with the generation of signals describing the spatial environment imaged by the eye. These signals can be based on a variety of criteria and can be quite complex.

Based on the above delineation of the processes within the retina, it has become possible to relate some of the morphologically labeled neurons to these specific processes for the first time. The neurons of the 1st lateral matrix have historically been labeled horizontal neurons. The neurons of the 2nd lateral matrix have historically been labeled amercine neurons. The ganglion cells transmitting monophasic signals have been labeled parasol cells historically. Many of the ganglion cells transmitting biphasic signals have been labeled midget cells historically.

There are two additional, less morphologically well defined, signaling matrices in the retina. The first is the matrix needed to satisfy the requirement for reducing the number of individual neuron fibers in the optic nerve. It also provides a degree of redundancy in the signal paths of the optic nerve, thereby improving the reliability of the system. This encoding process primarily involves the input structures of the ganglion cells. The matrix appears to utilize spatial diversity encoding. This type of encoding reduces the importance of, and uniqueness of the signal carried by, individual neurons. The second is the additional temporal encoding introduced into the signaling of the higher chordates by the continual tremor of the eye. Both of these signal encoding processes highlight the fact that the eye is primarily a change detector and that it does not transmit information about areas of an image.

Many investigators have attempted to evaluate the visual system by measuring the action potentials occurring at the output of the ganglion cells, using either external or internal probe techniques. The exterior probe approach, frequently labeled Electroretinography or ERG, necessarily involves the averaging of the signals from a vast number of individual ganglion cells. Alternately, the interior probe approach, usually involving a small number of individual ganglion cell axons, is incapable of knowing the level of encoding occurring before the signal reaches the emitter to base circuit of that ganglion cell. This level is typically very high. The measurements have been compared to a variety of specific stimuli applied to one or both eyes. The investigator has then attempted to explain his data without a clear understanding of what signal manipulations have occurred within the retina. All of these explanations must be considered highly suspect. The particular situation involving the various putative frequency responses, both temporal and spatial, of the visual system will be addressed late in this Chapter. A similar situation is found in the global psychophysical descriptions related to "center-surround" performance of large groups of signaling channels. Without a good understanding of the signal encoding employed within both the signal manipulation and the signal projection stages of the visual process, it is impossible to define these terms precisely. This is especially true where the data is derived from an electrical probe contacting individual ganglion cell axons or averaging the output of thousands of ganglion cells.

This material supersedes the broad statements of Dacey & Lee[2] in 1994 and Dacey[3] as recently as 1996. The neural mechanisms producing color opponency are quite understandable when one understands the three-terminal electrolytic nature of the neuron. The fact that one of these terminals provides an inverting function (without requiring any external feedback) is the explanation of the "surprising fact" that cone opponency arises by dual

---

[2]Dacey, D. & Lee, B. (1994) The "blue-on' opponent pathway in primate retina originates from a distinct bistarified ganglion cell type. *Nature,* vol. 367, pp 731-735

[3]Dacey, D. (1996) Circuitry for color coding in the primate retina. *Proc. Natl. Acad. Sci. USA*, vol. 93, pp 582-588

excitatory cone bipolar cell inputs. While the cell they refer to may appear to be a bipolar cell morphologically, it is bistratified and a horizontal cell electrophysiologically.

13.1 Chapter preview and approach

Figure 12.7-2 of the last chapter [, adapted from Breton, (1994), see Breton or Delay folder] provides a fitting artistic introduction to this chapter. Whereas the signal circuits in the Photoreceptor were single thread and only exhibited a single, albeit complex, output waveform to a given pulse of light, the situation in the remaining layers of the retina become so complex as to still defy description to a considerable degree (even in a statistical sense) at this time. The Inner Nuclear Layer (INL) of the eye is the location of the majority of the morphologically definable signal processing in the retina The situation is so complex in this layer that several different paths through the INL will be defined initially and then explored sequentially. **[Add figure]**

This work will recognize a basic anatomical division between the eye and the rest of the brain at the optic nerve. It will concentrate on a basic description of the primary signal path through the eye with an additional discussion of some of the supplemental signal paths which are clearly present in the retina. These will be described as the "straight through", the luminance, the chrominance, the appearance and the polarization paths. Higher cognitive processes in the brain itself may build on or in other ways supplement the initial data processing found in the above signal paths. These higher processes are not explored here.

13.1.1 Chapter Preview

[Much of this material may belong in the PART section for this chapter]
This chapter begins to assimilate a great deal of material from the previous chapters and it may be useful to review what models and concepts will be developed. The model will be extended to include all of the signal circuitry of the retina. This model will be adequate to explain the operation of vision in animals and to calculate the performance of the eye throughout the color vision domain and the simpler aspects of the geometric domain.

As a preview, it will continue to build on the previous chapters and show how:

> the animal visual system is capable of tetrachromatic performance, although this capability does not exist in the terrestrial chordates, which includes the "higher primates" and humans. Most animals, including insects employ one of two trichromatic systems but there are well documented tetrachromats in the animal kingdom. Some of these tetrachromats may become trichromats later in life or may in fact shift from one trichromatic system to the other during their lifetime.
>
> the visual system in the terrestrial chordates, including the higher primates and specifically humans, is trichromatic because of the limitations of the physical optical system. The visual system is based on a set of relatively narrow spectral range (short, medium and long wavelength) photoreceptors. There are no individual broadband photoreceptors in the visual system.
>
> the observed properties of human vision that hint at an opponent theory of color vision are a natural fallout of the signal processing system, part of which involves taking differences between the different signal channels for purposes of improved color discrimination. However, the actual pairing of signals is not orthogonal.
>
> the final signaling system used to communicate most information to the brain utilizes a type of phase modulation known as time delay modulation. Upon understanding the characteristics of this type of modulation, and the threshold characteristics of the ganglion cells, the nature of the so-called refractory period related to the onset of the first pulse from a ganglion cell becomes obvious.
>
> the eye does not communicate with the brain in a one to one relationship in terms of locations in the retina or types of photoreceptors generating a signal related to a specific color. The eye transmits a vector map to the brain and the brain provides two very important initial functions; it creates a full field memory map of the overall perceptual field and it uses a multi-dimensional "paint program" to process the information received. The map does not represent a geometric equivalent of the scene.

the brain employs a virtual map of the world outside of the animal that is inertially referenced to the calculated position of the head. This virtual map is not dependent on where the eyes or an individual eye is pointing. This "computed" virtual map is similar to a computer spreadsheet and can be expanded in a given species to reflect the total overall perceptual field of all of the eyes, one, two or more.

the subject of convergence, involving the overlapping data from two or more eyes, can be looked at from a different perspective based on the fact that the data from the eye(s) is in vector form and is used to compute a virtual map in the brain.

Following chapters will explore additional special effects observed in the laboratory and real life based on the models developed previously in this work.

13.1.2 Chapter approach

This chapter will continue to develop the signal processing circuitry of the eye in a context similar to that used in man-made analog electronic circuits until it finally reaches the Optic Nerve. This is a simplification in terms of the current biological literature that is attempting to manipulate too many concepts without an adequate substrate to rely on.

Although the methodology followed here can be interpreted in terms of information theory, this is best done after the fact. Without a tangible model of the processes involved, calculations based on information theory alone lose their relevance very quickly. Furthermore, investigators invoking information theory principles frequently start talking in terms of discrete sample information theory while their subject material is still in the analog signaling domain. Information theory was originally developed in the analog domain to solve analog problems.

In synthesizing the secondary signal processing circuitry, many guidelines are available. Some of the most important relate to the early work of Wright[4] and also MacAdam[5] in which their results are overlaid on the CIE (1931) Chromaticity Diagram. Later workers recognized the limitations of the 1931 diagram and attempted to provide a more useful (linearized) chromaticity diagram. This effort resulted in the CIE Uniform Chromaticity Diagram (1976). Any viable description of the secondary signal processing circuitry of animal vision must be compatible with the three cardinal points, the four null points and the uncertainty loci (resulting from color defects) overlaid on these diagrams. It must also predict the transition from this photopic based diagram to its scotopic equivalent. There may be some small inconsistencies due to the arbitrary aspects of these diagrams. These will be addressed in later chapters when a new theoretically defendable version of the CIE Chromaticity Diagram will be proposed for use specifically in research.

The goal of this chapter is to provide a series of circuit diagrams that accurately describe the operation of the animal vision system at the detail level. *These circuit diagrams should not to be confused with equivalent circuits*; these diagrams are meant to accurately describe the *actual biological circuits* found in animals using symbology adopted by man for use in his man-made electronic circuits.

This chapter will begin with the review of a wealth of appropriate data at the component level. It will then present a series of accurate, although idealized, circuit diagrams to aid in the understanding of the actual overall circuit diagrams. The actual overall circuit diagrams for all eyes, except the very simplest, involve such a high degree of signal divergence, signal processing, and signal convergence that they equal the complexity of an entire telephone exchange, including the master switch. Appendix D does attempt to provide a complete circuit diagram for a very simple eye, the compound eye of *Limulus*.

This chapter and the following one will develop both the Photopic and Scotopic Luminosity Functions from first principles based on the model and circuit diagrams presented in this chapter. These calculated Luminosity Functions, along with other calculated functions, will show how the various chromophores and signal paths combine to provide the sensation of vision. To avoid confusion within this chapter, it is important that the difference between the computational and perceptual signal levels be maintained. This chapter is only concerned with the computational level of signaling.

---

[4] Wright, W. ((1943) The graphical representation of small color differences. J.O.S.A. vol. 33, pg. 632
[5] MacAdam, D. ((1951) Influence of visual adaptation on loci of constant hue and saturation. J.O.S.A. vol. 41, pg. 615

This chapter will also include an analyses of the common ERG as used in clinical and research environments for the purpose of data extraction. Some discussion of the appropriate delineation of the various waveforms into their actual *a*-wave and *b*-wave constituents will occur. This delineation will be different than that of the current literature but also well documented. The justification for these modifications will be left to **Chapter 16 and 17**.

The chapter will conclude with a number of suggestions for additional laboratory work needed to provide detailed information missing from the literature based on the incites provided by the model and the circuit diagrams presented here.

13.1.3 Background information

Correlation of much of the data in the literature requires the understanding of where the data came from. There are two major schools generating the signal processing data of interest in this Chapter; the electrophysiologists and the psychophysiologists. Their techniques are grossly different and their results are frequently inconsistent with each other. Within each group, the results are also frequently inconsistent because of both the variety of techniques used and the simple models used to explain their data. A major conflict raged during the 1950's and 1960's because of the inordinately large probes used in some experiments relative to the size of the target phenomena. The foundation for many of these conflicts frequently related to whether a given experiment acquired data by way of intracellular recording or merely adjacent but extracellular recording. Later, the importance of knowing where in the intracellular space a probe was located became crucial. Some of the most recent conflicts relating to the luminance type signals associated with Amercine cells have been due specifically to inadequate models. This has led to inadequate experiment definition and planning.

Within the Electrophysiology group, there have been those using external electrical measurements, basically ERG's, and those utilizing probes--*in vitro* until recently but now also *in vivo*. These techniques have frequently produced data with different levels of detail. Shichi has provided a very high level description of the nature of the signals found within and adjacent to the signaling circuits of the retina[6].

The work of the psychophysiology group is not limited to the signals generated in the retina. Hence, they frequently speak of perceptual channels related to form, depth and movement which generally involve higher cognitive centers. In this work, care will be taken to restrict the analyses to signal that are clearly present in the retina as confirmed by electrophysiology.

13.1.3.1 Chromatic data

[xxx needs update]
Figure 13.1.3-1 provides an annotated CIE (1931) Chromaticity Diagram to illustrate several features that are of importance in this chapter. As proposed in this model, the three cardinal points for human vision are at S=0.437 μm, M=0.532 μm and L=0.625 μm. The null points are located at approximately 0.496 u, 0.570 μ, 0.531(complimentary)_μ and at "C", the neutral point corresponding to white. More specifically, the third null is located at x=0.4, y=0.11 on the CIE (1931) Chromaticity Diagram. The Deuteranope (red/green color blind) does not exhibit a null at 0.570 μ. The Protanope (red blind) does not exhibit a cardinal point at 0.625 μ. The point "C" is difficult to define precisely because it is so sensitive to the observers state of adaptation. This is also true of the other null points but to a lesser degree of importance. The point at 0.531 μ (marked complimentary to indicate it is not along the loci of real wavelengths on the CIE Chromaticity Diagram) is difficult to measure precisely by psychophysical means unless special steps are taken to define the state of adaptation of the M-channel, or alternately, desensitize the M-channel almost completely. Furthermore, the measurement of the null point between the cardinal points 0.437 μm. and 0.532 μm. is difficult to determine and grossly different experimental values are given by different experimenters based on differences in technique and conditions. Judd & Wyszecki[7] give a value of 0.570 μm. while Wright & Pitt[8] gives a value of 0.600 μm.

---

[6]Shichi, H. (1983) Biochemistry of Vision. NY: Academic Press pg 227
[7]Judd, D & Wyszecki, G. (1975) Color in Business, Science, and Industry (3rd ed.) New York: Wiley
[8]Wright, W. & Pitt, F. (1934) Hue discrimination in normal colour-vision. Proc. Phys. Soc. (London) vol. 46, pg 459

How the above null points are described will be an important guideline in the following synthesis. Since the CIE (1931) & (1976) diagrams are not good trilateral representation of normal color vision (the principal points are not located at the corners or other graphically significant points), psychophysicists have generally described the null points in terms of either S-M or S-2M or occasionally using a loci given by S-2M+L (as an example) depending on how they choose to plot the loci connecting the different color constancy lines on the diagram. This is important because these different empirical mathematical descriptions of the null between the S and M chromaticity channels lead to significantly different circuit implementations. On the other hand, analysis of the actual circuit implementations lead to a completely different set of descriptors of the principle points and the nulls.

[in next paragraph,, ??current!!! voltage signal by the input characteristic of the XXX, junction of dendrite and axon.]

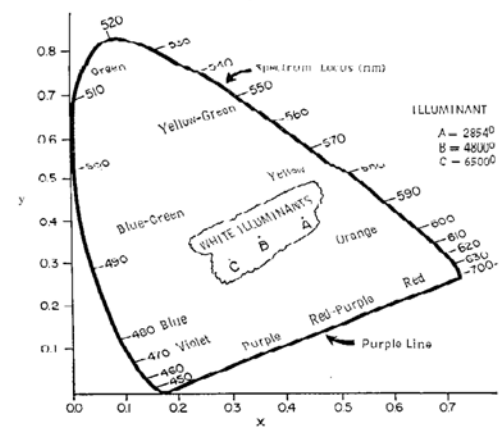

Figure 13.1.3-1 The chromaticity diagram: C = xR+yG+zB; z = 1−(x+y)
See Rubin & Walls for details

Figure 13.1.3-1 An annotated CIE (1931) Chromaticity Diagram. TRACE & REDRAW IN ILLUSTRATOR. ADD “f” TO “c” ETC.

The last chapter showed that the output voltage signal from each OS is a negative going signal as measured by the ERG (with a peak amplitude of about 500 microvolts in humans). The signal is generated by a signal current coming out of the environs of the OS on the dendritic structure of the IS and ranging from zero to a minus 30 pA (typical of vertebrates). The signal is quantized at low levels and appears to be photon noise limited. The signal is logarithmically compressed as a function of input irradiance. A mathematical formula for the signal is available which completely describes the steady state and transient signal resulting from any monochromatic input irradiance to a specific photoreceptor; provided the initial state of the cell is known.

13.1.3.2 Signal Waveform data

Although it is still not accepted by many in the field, there is now an abundant experimental record that the signal waveforms encountered within the retina prior to the output of the ganglion cells are analog in nature and predominantly electrically bipolar. Furthermore, each functional plasma of a neuron exhibits an electrical resting potential that can be described as a direct current bias level and can be measured directly. The signal waveform rides on this bias just as found in other electrical circuits.

An extremely important point which will be addressed more completely in the next section has to do with the current state of measuring these waveforms and properly associating them with specific cells. Much of the literature involves probing the retina with electrical conductors that are an order of magnitude larger than the signal sources. This leads to significant crosscoupling of waveforms from individual sources as recorded by the instrumentation. Only recently, with the introduction of dye injection into a cell after signal recording has it become possible to specify exactly where a signal was recorded.

The dye injection technique remains inadequate, however, when recording sub cellular size structures such as synapses. In these synapse situations, it is generally an electronic node that is measured; the node being described as a junction between a group of neural structures, both axonic and dendritic. Many of these nodes involve more than a dozen structural elements, all within the diameter of the probe. Worse, there are frequently a dozen of these nodes within the diameter of the probe.

Yang, Tauchi & Kaneko have provided very valuable data regarding the signal processing within the eye of the

goldfish, *Carassius auratus*[9]. Although their model suffers from specificity, the data can be reinterpreted within the framework of this theory with important results. As an example, they say they probed both the cell bodies and axonal extensions of L-type external horizontal cells and found no significant differences in the signals. This indicates they only probed the non-inverting inputs to the cells. They apparently did not encounter a defining feature of these cells, their ability to invert signals applied to their poditic terminals. Their Table 1 would be extremely valuable if it were extended to longer wavelengths and included the difference, Log G minus Log B. Such data would characterize both the P and Q chrominance channels of the goldfish. It would verify the theoretical differential output of these channels presented in **Section 17.3.2**.

13.1.3.3 Frequency versus temporal filters (& foveola image sparing)

There are a variety of papers in the vision literature seeking to physically locate or conceptually define one or more frequency selective filters in the visual system. These studies have generally concentrated on *chordata*, and specifically on humans and frequently cats. There is no sign of a physical frequency selective filter in the signaling system of the visual system beyond the simple single pole filters associated with a high pass or low pass network. As a general rule, there is only one such filter in the visual system. This filter is incorporated into a feedback circuit associated with the adaptation amplifier of each photoreceptor cell. Because of this configuration, this single stage filter plays both a high pass filter and a low pass filter role.

Looking at the use of frequency domain filters by man, it is easy to see that they are a crude method of obtaining frequency selective filtering compared to the associated techniques of temporal domain filtering. Frequency domain filtering has nearly disappeared from modern filter construction since the advent of the digital processing microchip and the mathematical discipline of time domain circuit synthesis. The animal visual system was based on time domain filtering from the start.

In attempting to define the photoexcitation/de-excitation function in vision, attempts have also been made to define a multistage filter made up of simple first order filters. This has not been successful. It has been based on the use of simple mathematical concepts that were inadequate to the task but illustrative of the underlying problem. In circuit synthesis, there is a very close relationship between the frequency response of a system and its temporal response characteristic. This relationship only becomes apparent when the mathematics of the calculus and differential equations are applied to the problem.

The basic concept of obtaining frequency domain signal filtering through the use of time domain signal manipulation techniques involves the summation and comparison of signals that have been delayed in time relative to each other. This time delay is introduced through a time dispersion filter that relies on different signal path lengths for individual signals that are all traveling at essentially constant signal velocity. These techniques are highly developed in the visual system and present an architecture of sophisticated beauty not recognized in the literature. It also leads to great empirical difficulty in the laboratory when it is not understood.

A key feature of the visual system of *chordata* is the dispersion in time between the signals from different locations in the retina relative to the foveola, due to the physical location of the so-called “blind spot,” the entrance to the optic nerve, and the arrangement of the ganglion axons proceeding to that entrance. This fanning of the axonal paths is essentially complimentary to the fanning labeled Meyer’s loop between the LGN and the primary visual cortex. The result of these two fans leads to unique capabilities. First, the two time dispersion filters resulting from this fanning are complementary and cancel at the primary visual cortex. However, the LGN is physically located between these two time dispersion filters. As a result, the LGN is in a position to compare signals from various locations in the retina based on their time delay. These comparisons are the key to both stereopsis and the coarse determination of location and course of travel of events appearing in the visual field of the system.

For completeness, it should be noted that the photoreceptors of the foveola are not well positioned to participate in this level of time dispersion filtering. All of these cells are located at nearly the same spatial location relative to the scale of the complete retina. Because of this fact, these cells are not of significant use to the filtering mechanism found in the LGN. Based on this architectural feature, the actual geometry of the signal manipulation elements, particularly the ganglion cells, related to the foveola do not exhibit the same geometrical organization as do the remainder of the cells of the retina. Furthermore, these ganglion cells do not project to the LGN! They are processed entirely separately within the Precision Optical System of the visual system.

---

[9]Yang, X-L, Tauchi, M. & Kaneko, A. (1983) Convergence of signals from red-sensitive and green-sensitive cones onto L-type external horizontal cells of the goldfish retina. *Vision Res*. vol. 23, pp 371-380

As noted in the literature, the signals from the POS are found to arrive in the more hierarchal areas of the cortex, V4, V5 and other more cognitively oriented areas, before the signals from the primary visual cortex, V1. One of the reasons for this is the fact that the signals generated in the foveola do not pass through the LGN and V1. Since they do not pass through these elements, damage to these elements does not restrict the ability of the animal to see objects projected onto the foveola. This unusual condition is known in the literature as macular sparing. However, it does not extend to the edge of the macular, only to the edge of the foveola. The term should be replace with the more specific foveola image sparing.

13.1.3.4 Histological data

The histological situation is so complex as to still defy detailed description. The review by Wassle & Boycott[10] in 1991 is of great value in two ways, it surveys the entire field and also indicates the plethora of names for the same basic cell type as studied and named by different investigators working with different animals. The book by Shepherd[11] in 1979, although older, discusses the situation in more detail.

13.1.3.4.1 Junctions

Whereas twenty years ago it was impossible to find visual scientists who would entertain the idea of electrical junctions in the animal neural system, it is now becoming common to recognize the existence of some so-called gap junctions in the visual system if not in other neural tissue. The characteristics of these gap junctions have not been developed in the literature to date; however, it is now possible to do so and work is proceeding in that direction. The electrical characteristics of many junctions is now being measured, either by intent or through instrumentation designed for other purposes. Wong-Riley[12] stressed in her remarks the high concentration of electronic charge on the surfaces associated with various synapses in the retina, not just those surfaces associated with the gap junctions.

It is very possible that many of the materials found in the synapse area and proposed as neurotransmitters in the literature may turn out to be a source of electrical charge at the junction. In this case, the signal crossing the junction may not involve the physical movement of ions but of the more sophisticated “holes” so widely encountered in semiconductor physics and more recently in the metallurgy of whiskers, metallic dendrites etc. Both ions, holes and electrons can move by diffusion in the junction area; with *ions moving the most slowly* by several orders of magnitude.

[xxx rewrite]
In this work, the reader is welcome to think of the equivalent circuits described for the various neurons to be merely analogs of the actual ion diffusion processes involved up to a point. However, he will not be able to follow the details of the processes involved. He must keep in mind that what he is thinking of as equivalent circuits are in fact the actual circuits. The material constituting the putative neurotransmitters of earlier work may in fact be required at the junction; however, they may be present as participants in an electrostenolytic process providing electrical power to the neurological system. liquid crystalline state which supports the diffusion of “holes” much more effectively than actual ions. In this case, the neurotransmitter is not consumed and the velocity of signal propagation is much faster than via physical ion transport.

Before addressing the subject of mapping of the signal paths in the retina, it is useful to re-address the subject of photoreceptor types. For historical reasons, two types of photoreceptors were defined on very much philosophical grounds. The idea was adopted that there must be two independent mechanism supporting photopic and scotopic vision.

When the histologists began exploring the retina, they separated the photoreceptors they found into two broad groups, the rods and the cones. The initial sort was based on the shape of the outer segments as observed at very low optical magnifications. This criteria did not stand the test of time. However, during this period, others reached the classic “A-haa” stage and declared that vision relied upon two separate mechanisms, with the rods contributing to scotopic vision and the cones to photopic vision. This determination also failed to meet the test of time. The

---

[10]Wassle, H. & Boycott, B. (1991) Functional architecture of the mammalian retina. Physiol. Rev. vol. 71, no. 2., pp. 447-480
[11]Shepherd, G. (1979) The synaptic organization of the brain. New York: Oxford Press
[12]Wong-Riley, M. (1997) What can cytochrome oxidase and other neurochemicals tell us about the retina. 1st annual conference on molecular, cellular and genetic approaches to function of the retina. Fort Lauderdale, FL. 9-10 May 1997

literature now speak of "red rods" and "green rods". Later, many papers were written saying the criteria was the shape of the inner segments. This criteria also failed to provide a definitive classification system. More recently, the literature reflects on the shape of the axonal ending of the photoreceptor as a method of classification; with the rods described as having a spherule shaped ending and the cones a pedicle of a more cylindrical shape oriented perpendicular to the axis of the axon. Unfortunately, these descriptions remain only coarsely descriptive and have not been shown to be correlated unambiguously with a specific spectral response. At the present time, the only definitive way to separate the photoreceptors into classes is via axial microspectrography. Transverse microspectrography can not separate the photoreceptors chromatically because such instrumentation can only measure the irrelevant isotropic absorption characteristic of a photoreceptor. In no case has a photoreceptor been measured that exhibited a spectral response corresponding to that of either photopic or scotopic vision.

13.1.3.4.2 Probing and mapping the retina

To begin an orderly description of the Stage 2 retinal circuitry, it is necessary to begin with the simplest possible circuit model and then expand it slowly explaining all of the caveats that apply to each new overlay. Only in this way is it possible to avoid incorporating assumptions that ultimately lead to confusion and misleading conclusions. Because of this situation, it is not appropriate to utilize graphics taken from other work directly. Instead many graphics will be presented "based on" the work of others with textual comments on how the graphics were modified to represent later information, specifically the electrical circuit characteristics of the histological structures.

Figure 13.1.3-2 provides the basic roadmap used here for the Stage 2 signal processing. The figure is heavily modified from a simpler (even more conceptual) version by Werblin[13]. On close examination, there appear to be at least one drafting problem in the Werblin figure concerning the calls to the bipolar cell terminals and widely ramifying cells. The top plane consists of a large number of four spectrally different photoreceptor cells in an array of unspecified parameters. The photoreceptor terminals are in contact with both a widely ramifying set of horizontal cells and a set of bipolar cells. Each bipolar cell also exhibits multiple (although fewer) inputs to its dendritic terminal. The bipolar cells axons terminate at another layer associated with the inputs to a second set of widely ramifying cells (typically labeled amercine cells but known to consist of many subtypes). There are inputs to some ganglion cells associated with this layer as well. Finally, there are probably axons associated with the first ramifying layer (horizontal cells) that terminate in this layer as well [xxx show horizontal axons terminating in this layer]. The complexity of this layer is so high that making broad and comprehensive statements about how cells interconnect in this region is difficult. [change figure to show ganglion axons xxx] These connections vary considerably with position in the retina. Thus the figure is a caricature of the global situation but is not representative of local situations.

[xxx rewrite this] The figure is meant to describe the signal paths emanating from one photodetector cell (PC) and to emphasize the fact that the laboratory investigator normally does not measure the output of a given cell but in fact the node at the output of the given cell. Thus it is very dangerous to speak of the output of a given bipolar cell unless the investigator is able to somehow isolate the output of the cell from other inputs to the relevant node and to disconnect the pathway to the following circuit element without disturbing the impedance of the circuit node. As seen elsewhere, this last condition is generally impossible in a direct coupled network where the output current from the previous circuit is placed on the input capacitance of the following circuit and the voltage is measured as if it were the output of the first circuit independently.

[13]Werblin, xxx et. al. (1996) The computational eye *IEEE Spectrum* May, pp 31-xxx

Notice the dimensional references in the above figure. If one explores the retina beginning at the vitreous surface, the distance to the scleral end of the OS is only about 300 microns (0.3 mm)[14]. Furthermore, ALL of the nodal points in the OPL lie in a plane with a thickness of less than or equal to the diameter of present day probes. The nodal density of this plane is such that it is virtually impossible to contact only one of these nodes. In the past, it has been common to overcome this problem by utilizing one of two techniques:

+ inserting a probe into the retina an approximate distance to the layer of interest and then adjusting the depth of the probe incrementally until a waveform of interest is obtained.

+ actually probing the nucleus of the neuron of interest, instead of the node, until a signal exhibiting the desired waveform characteristics was found**.** However, it is now known that the active portion of many neurons is not located in or near the soma and this type of probing is similar to sticking an electrical probe into a circuit board at a random location**.**

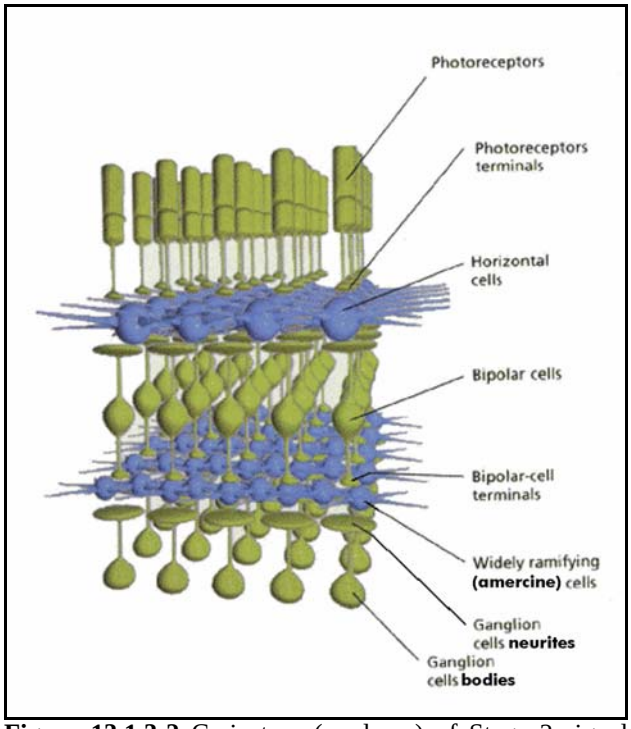

Figure 13.1.3-2 Caricature (roadmap) of Stage 2 signal processing. See text. Based on a conceptual figure by Werblin, et. al., 1996.

[14]Shepherd, G. *ibid.* pg. 185-6

Tomita used the first method quite productively 40 years ago. However he was only able to describe the results statistically as to their source.

The actual electrically active portion of many visual neurons in not even in the bulk portion of the neuron, usually described as the nucleus or Soma. It is frequently found at the junction of the dendritic and axonal portion of the neuron which, especially in the case of monopolar neurons, which is a description that can be applied to many horizontal and amercine neurons, is external to the main body of the neuron, and dimensionally very small--on the order of 2 microns or less. It appears from the literature that this active portion, the Activa, is generally smaller than 2 microns in visual neurons.

Based on the above, the important points of Figure 13.1.3-2 can be summarized:

+ It is physically difficult to impossible to probe for and locate the Activa in a given neuron.

+ It is nearly impossible to contact a single nodal point in any of the layers of the retina.

+ If a nodal point is contacted, the investigator must recognize that the signal waveform obtained is probably the result of multiple inputs and the voltage measured is probably a function of the circuitry surrounding the node.

+ As indicated elsewhere in this work, the voltage measured at a given node is probably described as the logarithm of the signal current at that node because of the diode like impedance of the membrane upon which the current is placed (traveling over).

There are three additional points that should be made;

+ As pointed out by Shepherd[15], amercine cells do connect to each other; thus allowing more complex signal processing to be accomplished in a physically compact region.

+ Except in some special cases, not yet described in the literature, it is not likely that a single horizontal cell or a single amercine cell operating in a linear mode will accept an input from and deliver an output to the same nodal point. Such action would be algebraically redundant. If the cell is introducing a time delay, this re-entrant processing could be useful.

+ If the reader is comfortable with the work of Dacey & Lee[16] in describing two totally separate dendritic trees for one (bistratified) ganglion neuron, he should have little difficulty in accepting the possibility that these two trees go to different inputs to an Activa inside the ganglion cell. Similarly, he should have little difficulty with allowing two different dendritic trees to exist in other (bistratified) neurons. One tree would go to the non-inverting input and the other to an inverting input (see Appendix B). Such dual input neurons appear to be one of the principal building blocks of the retinal signal processing system.

Since the 1960's, a concept of the signal processing architecture of the retina due to Dowling (with Werblin in many cases) has been widely reproduced[17]. A recent expansion on these earlier concepts is presented in Backhaus, et. al[18]. Their figure continues to try to assemble the individual types of recognized neurons into a rational architecture. There are a number of question marks sprinkled about the figure. In addition, the figure contains no ultraviolet receptors and very few S–channel receptors. Those concepts were based on the neuron as a two terminal device. The last two points in the above list (and the neurons defined in **Chapters 8** and **9**) suggest an alternate architecture based on a three terminal neuron. This architecture is shown in **Figure 13.1.3-3**. This concept provides a much more definitive architecture. While applicable to all chordates, it will be discussed primarily from the perspective of the human.

Except for the photoreceptor cells which are not detailed, each neuron is shown as a three terminal device. The

---

[15]Shepherd, G. *ibid.* pg. 190
[16]Dacey, D. & Lee, B. (1994) The “blue-on’ opponent pathway in primate retina originates from a distinct bistarified ganglion cell type. *Nature*, vol. 367, pp 731-735
[17]Dowling, J. (1968) Synaptic organization of the frog retina. Proc. Roy. Soc. B. pp. 205-228
[18]Backhaus, W. Kliegl, R. & Werner, J. (1998) Color Vision: Perspectives from Different Disciplines. NY: W. de Gruyter pg 83

terminal marked with a minus sign is the inverting input. That marked with a plus sign is the non-inverting input. Looking at the bottom row first, the ganglion cells are all shown with their inverting input terminals connected to a bias supply. This is a simplification for two reasons. First, the immensely complex input structures of many of the ganglion cells are associated with diversity encoding. This encoding is primarily a stage 3 function. This function will be discussed in **Chapter 14**. Second, the bias voltage applied to the parasol (P) ganglion cells is not necessarily the same as that applied to the midget (M) cells. The parasol cells are normally biased so that their output reflects a monotonic input. They typically produce few or no action potentials in the absence of stimulation. On the other hand, the midget ganglion cells are normally biased to produce a stream of action potentials (typically 30 per second) in the absence of any stimulus.

The diagram is divided into foveal and non-foveal portions to illustrate the direct path provided between the foveal photoreceptors and the associated parasol ganglion cell leading to the pretectum. The axons of these ganglion cells constitutes a very small part of the optic nerve. They have not been delineated as a separate group in most of the literature. However, the fact that part of the optic nerve(s) exhibit a second chiasm and some of the nerves terminate in a separate and distinct area of the pretectum is noted. Non-foveal photoreceptors do not normally exhibit this direct access to the midbrain. Their output is manipulated by a variety of signal processing neurons arranged in a series of signal processing matrices. The first matrix contains the morphologically labeled horizontal cells. These cells appear to be primarily involved in creating the chrominance signals passed via the midget ganglion cells to the parvocellular portion of the LGN. The cells within the dashed boxes are shown to be consistent with the literature. They appear to be redundant in this architecture at this level of detail. These cells appear to act as simple non-inverting signal repeaters. They may be omitted without compromising the concept. However, if they exist, they may have a function that is not yet appreciated.

The second matrix is dominated by the bipolar cells collecting the signals from multiple photoreceptor cells to form the luminance signal projected through the parasol type ganglion cells to the magnocellular portion of the LGN. The bipolar cell illustrated in the center of the figure sums signals from a wide variety of photoreceptors. The extent of this collection field is indicated by the extensive arborization of some of these cells.

The third matrix does not appear to play a major role in humans and may only be rudimentary (based on various micrographs). However, its conceptual role is clear. Although the generic name, amercine cell, has traditionally been given to the cells in this matrix, recently, many secondary distinctions have been made between the cells. The cells appear to operate primarily in creating signals indicative of specific shapes, orientations and patterns within their portion of the retinal field of view (See **Section xxx**). These cells may also exhibit extended arborizations of both their dendritic (non-inverting) and poditic (inverting) inputs.

The mode of operation of the cells of the second lateral matrix has not been clearly defined in the past. The primary reason appears to be failure to recognize the slow transport velocity of analog neural signals. While looking for spatial relationships within the arborization field of individual amercine cells, the investigators have not recognized the importance t of this transport velocity when expressed as a time delay relative to the initial retinal position of the initiating photoreceptor. These delays as a function of distance essentially perform a convolution of the collected signals. The result is the long sought “spatial frequency tuning function(s).” These functions exist only in the temporal domain. **There are no spatial domain tuning functions in biological vision**. The temporal filtering performed within the second lateral matrix (and possibly within the first) can significantly reduce the signal information that must be passed over the optic nerve. It can also relieve the LGN and area 17 of the cerebral cortex of part of their workload.

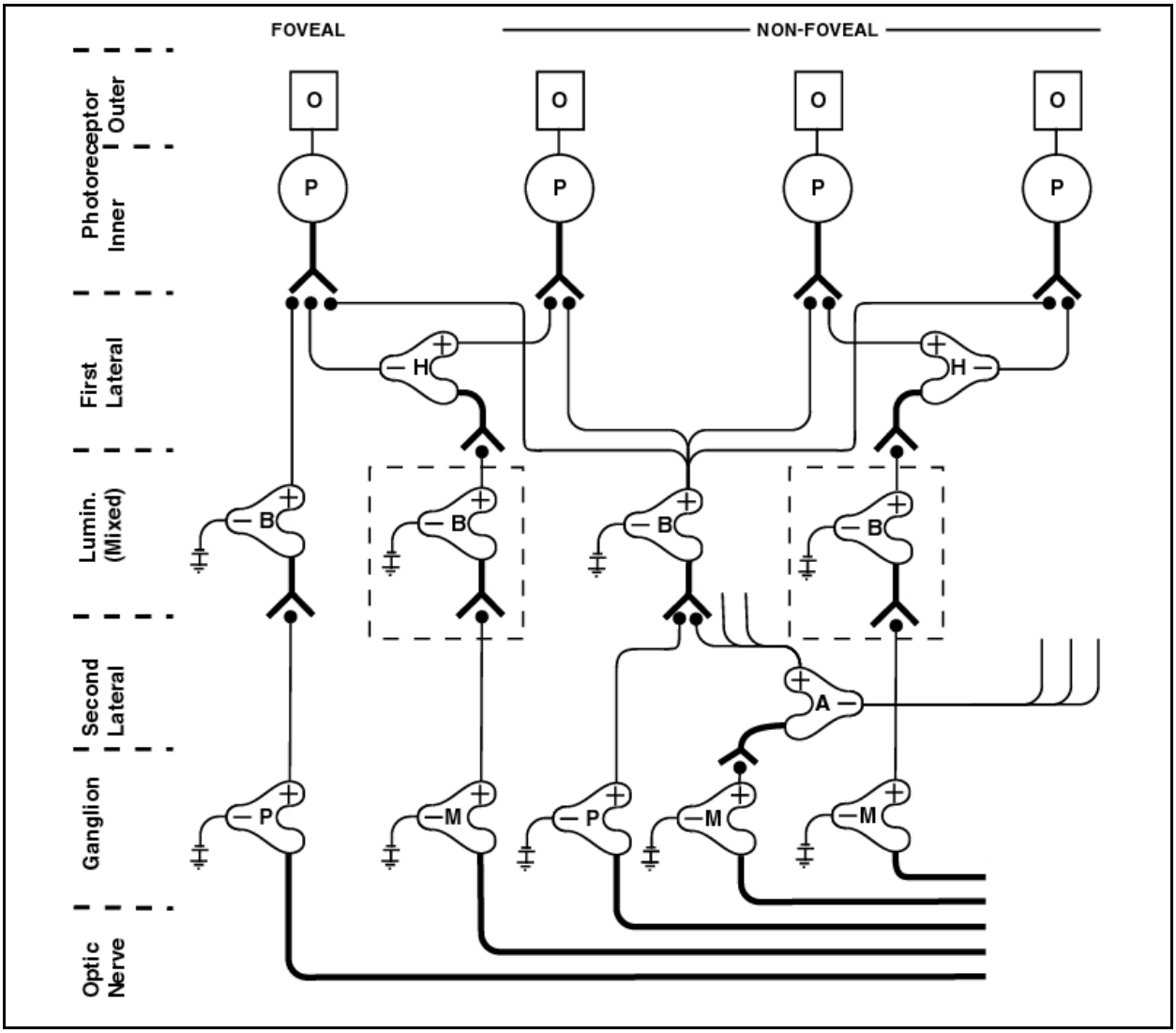

Figure 13.1.3-3 Signaling architecture of the retina. The layers listed on the left correlate directly with the cross section micrograph in the following figure and in Chapter 3. The signal processing neurons are shown as three terminal devices. The direct foveal path on the left is used to provide a unique human (? primate) capability. The two amplifiers in the first lateral matrix provide the difference signals associated with the chrominance and polarization channels. The two amplifiers shown in dashed boxes may or may not be present. Their functional requirement is not defined. The third amplifier in the luminance row collects signals from all spectral types of photoreceptors and creates the luminance signal. The amplifier in the second lateral matrix row is typical of those forming signals for the appearance channel. See text for details.

13.1.3.5 Morphological forms of relevant neurons

A variety of non sensory neurons are found in the neural layers of the retina. These neurons take on specific structural forms based on their functional role as well as the volumetric space available. One consequence of the limited space available is the considerable variability in axon length among the neurons. Some neurons have such short axons they are called amercine (axon-less). Other neurons package the axon and part of the neurite structure in a common shaft leading to the appearance of a lack of an axon (except for the appearance of the pedicle).

A feature of considerable importance in stage 2 signal processing is the dual input neuron. A dual input neuron

exhibits a neurite tree associated with the conventional label dendrite. It also exhibits a second distinctly separate neurite tree associated with the podite terminal of the neuron. This structure can result in particularly beautiful overall structures that Dacey & Lee have defined as bi-stratified neurons[19]. The important feature to note is the polarity difference in these input structures. The result is a circuit optimally designed to perform a signal differencing function. The bi-stratified input structure can be associated with either analog or phasic neurons since these neurons are differentiated primarily by differences in their internal feedback. The bi-stratified analog neurons are composed of horizontal and amercine cells. The bi-stratified phasic neurons are members of the "midget" class of ganglion cells, those generating a continuous train of action potentials in the absence of any stimulus.

13.1.4 Subdivision of the conventional layers of the retina

The general nomenclature of Boycott & Dowling will be followed in this chapter (See **Section 3.xxx**). However, it is useful to further subdivide the region around the inner nuclear layer (INL). The fiber layer will be re-labeled the outer fiber layer. The inner fiber layer will be divided into an inner plexiform layer and an inner fiber layer (the two separated by the pedicles of the inner nuclear layer). Following the earlier notation, the fiber layers consist primarily of axons and the plexiform layers consist primarily of dendrites. The inner nuclear layer is divided into an outer matrix layer (OML), a middle matrix layer (MML) and an inner matrix layer (IML). While the INL is not highly differentiated, the OML contains the lateral neurons of the first lateral matrix. The IML contains the lateral neurons of the second lateral matrix. The MML contains the bipolar neurons associated with the monopolar signaling (luminance) channel. These designations are shown in **Figure 13.1.4-1**.

[19]Dacey, D. & Lee, B. (1994) The 'blue-on' opponent pathway in primate retina originates from a distinct bi-stratified ganglion cell type. Nature, vol. 367, pg. 731-735

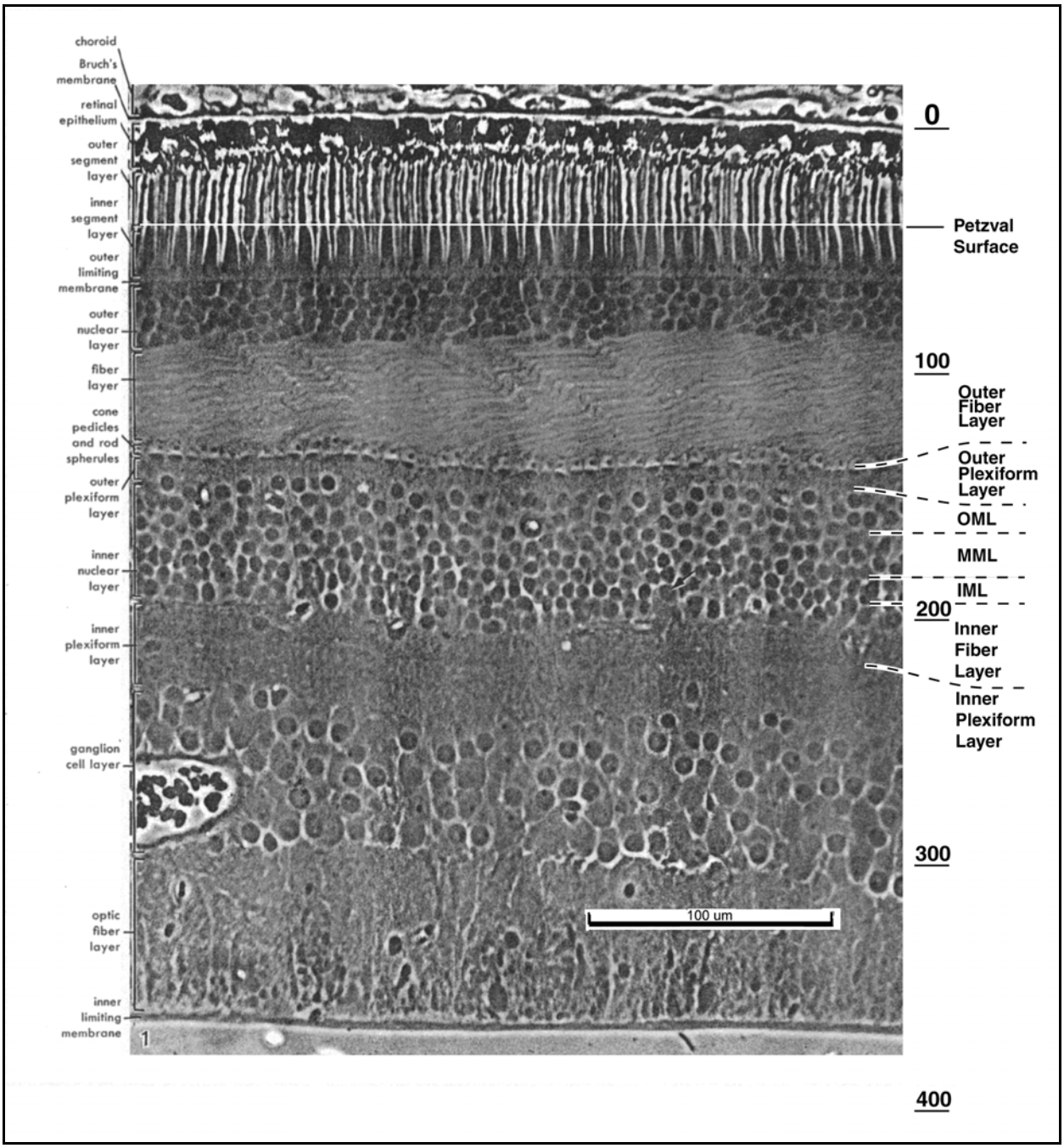

Figure 13.1.4-1 Redefinition and expansion of the named layers of the human retina. Scale in microns on the right. See Text and Figure 3.2.1-1. Original micrograph from Boycott & Dowling, 1969.

13.2 Classification of physical signal paths

The basic processes accomplished in the Signal Manipulation area (Inner Nuclear Layer) of the retina result in a very major reduction in the data at the output of the retina compared to that received at the input. This is accomplished without a significant loss in information content from the organism's point of view. The signal manipulation portion of stage 2 includes the neurons of the first, second and luminance processing matrices (see **Figure 16.2.1-1)**. It also includes the ganglion cells if the diversity encoding they perform is considered part of the signal processing

function. The signal conditioning of stage 2, performed within the photoreceptor cells, is not usually included in discussions of signal processing since it is so closely associated with the mechanisms of stage 1, signal sensing.

The input signals to the Inner Nuclear Layer are generated at the output of the photoreceptors and are generally described as voltages.

After one or more neural stages, the output signals from the Inner Nuclear Layer are presented to the ganglion cells of the Ganglion Cell Layer as voltages. As in the photoreceptor case/INL neuron case, the voltage is applied to the ganglion cell via a a voltage divider incorporating the intermediate synapse. This voltage divider has been found to form a “lead-lag” network in some cases. These voltages modulate the binary (not analog) output signal of the ganglion cells (See **Chapter 14**).

13.2.1 Principle signal paths

Based on [**Figure 13.1.4-1**], it is possible to define a wide range of signal paths through the signal processing matrices of the signal manipulation stage. Historically, lists of potential paths have been developed based on, (1) the complexity of the axon terminations of the photoreceptors and (2) on the complexity of the arborization of the following neurons. Such a list could easily contain the following signal path types:

1. simple "straight through" paths
2. divergent paths
3. convergent paths
4. feedback paths
5. Undelineated and "phantom" paths

Each of these candidate types have features of their own and will be discussed briefly below. **Figure 13.2.1-1** will be used to guide that discussion. It shows the fundamental or “straight through” signal path of the retina on the left on the left. It also shows a variant of this path, the summing path, via the dashed lines. A simple differencing path is shown on the right. A variant of this path is also shown with the aid of dashed lines. When used in the second lateral processing matrix, this variant provides the mechanism frequently defined as a “tuning mechanism” in psychophysical vision research. When used to support signals originating in the foveola or for forming luminance channel signals by summation, the non-inverting bipolar cell on the left is used in combination with the parasol type of ganglion cell. When used to form any “difference” signal path, e. g., chrominance, polarization or appearance, the lateral cell type is used. Its output is delivered to a midget type of ganglion cell.

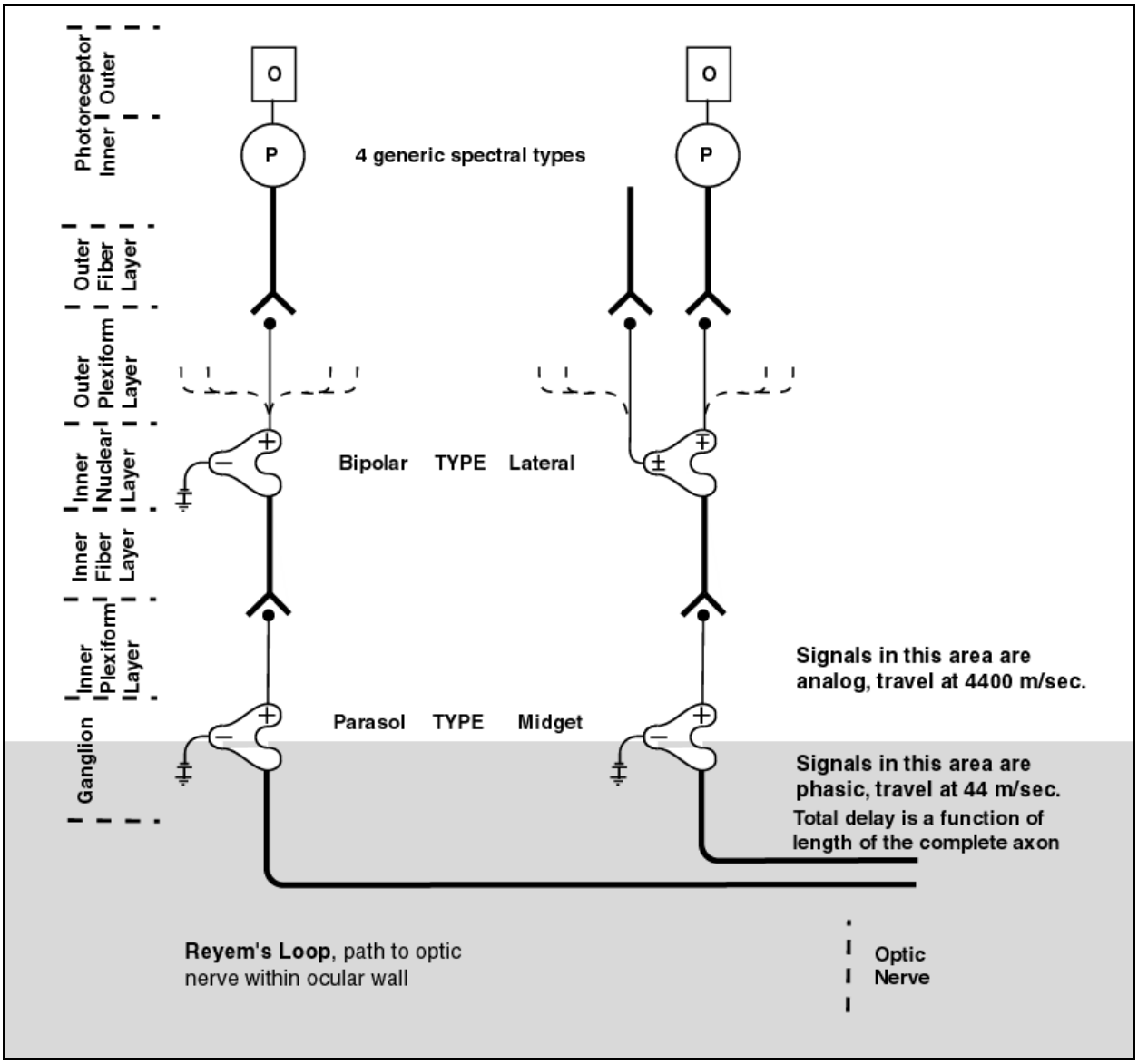

Figure 13.2.1-1 The “straight through” and “difference” forms of signal path shown symbolically. These forms are easily associated with the morphology of the retina.

Speaking in the most general terms, it appears:

+ the "straight-through" paths are associated with a nominal 23,000 photoreceptors located at the very center of the fovea, the foveola, in humans. This region has a diameter of about 1.2 degrees.

+ the divergent paths appear to predominate in the fovea and para-fovea where they provide much of the spatial and color contrast processing of the retinal signals. These paths extend into the foveola as an overlay to the "straight-through" paths and outside of the parafovea as an overlay to the convergent paths.

+ the convergent paths appear to predominate in the perifoveal region, where they probably concentrate on "alarm" signal generation, and achieve an extraordinary degree of data reduction.

Figure 13.2.1-2 [Figure 13.2-1] illustrates the variety of signal path to be explored here. The following discussion will focus initially on the straight through path shown by the heavy line. The discussion will then expand to cover the various alternative paths. After the operating characteristics of the various cells are enumerated, the questions of geometric and chromatic signal processing will be undertaken.

Figure 13.2.1-2 Overall signal path showing divergences and convergences EDIT.

13.2.2 The "straight-through" path

The "straight-through" path is usually described as consisting of a photoreceptor with a single axon foot connecting to a single "midget bipolar" neuron in the Inner Nuclear Layer which in turn connects to a single ganglion cell in the ganglion cell layer. This path is relatively easy to observe at the histological level. However, caution is indicated since the investigator may not observe, may ignore or may de-emphasize any other dendrites associated with the photoreceptor foot, especially if they are not in the plane established for viewing during cell preparation. Dacey &

Lee[20] have recently discussed such a straight through path for the short-wavelength, or s-, signal channel. They define it as the 'blue-on' path since it does not exhibit any influence from the M- or L- channels. The description of a blue-on channel, although conventional, will not be used here since it implies a 'blue-off' channel. Such descriptions are misleading; the 'blue-on' channel responds to biphasic changes in the analog short wavelength signals. They also go on to speculate that: "It seems probable that a second, hyperpolarizing bipolar cell type conveys M- and L- cone input directly to the outer dendritic tree."

The straight-through path is thought to be of primary use in the higher resolution skills where it is desired to pass signals of the ultimate in spatial resolution to the brain. This path is usually related to the photoreceptor cells found in the fovea(s) of the retina.

13.2.3 Divergent Paths

It is likely that all photoreceptor axon feet in the area of the fovea and parafovea have multiple dendrites associated with them; and that these dendrites result in a dispersion of the signal information associated with a single photoreceptor. It is possible, although not necessary in this model, that even the photoreceptors in the foveola exhibit this characteristic. These divergent paths would contribute to both spatial signal manipulation (such as contrast edge detection) and color interpretation. These divergent paths are frequently caricatured by several "horizontal cells" contacting each of many photoreceptor cells.

13.2.4 Convergent Paths

The convergence of neural pathways is closely associated with the concept of signal summation over a spatial area of the retina. Spatial summation has been explored extensively from the psychophysical perspective because of the apparent simplicity of the equipment and protocol required. Unfortunately, this apparent simplicity has led to a great deal of fragmentary information with many uncontrolled variables. The physiology of the visual system suggests a much more complex signaling structure than anticipated by most psychophysical studies. These studies will be addressed in detail in **Section 17.xxx**.

This work separates signal processing into the initial processing associated with the retina (Stage 2) and the more sophisticated processing associated with the central nervous system (Stage 4). This chapter is only concerned with Stage 2. As a result, much of the global psychophysical literature related to signal summation must be examined carefully as to relevance to Stage 2 signal processing.

As a converse to the previous section, it is likely that the pedicles of all photoreceptor axons in the area of the perifovea and parafovea have multiple dendrites associated with them and these dendrites result in a convergence of signal information from a group of photoreceptors at a single signal processing neuron. It is most likely that convergent paths predominate in the perifovea where generation of an "alarm" signal is of paramount importance. In this case, many photoreceptors may be connected to a single neuron in the inner nuclear layer; and this neuron may exhibit the very high gain associated with a comparator circuit, a circuit capable of generating an output in response to a small signal on any of a large number of input dendrites.

13.2.5 Feedback Paths

There has been a great amount of discussion in the literature about the presence of, purpose of and process of feedback in the retina. However, without a model to build on, it is very difficult to say specifically that feedback is or is not utilized in the retina. This subject will be addressed again in later sections and chapters. See **Section 16.1.3** & xxx.

13.2.6 Phantom paths

[next paragraph is probably too strong]

Many psychophysical experiments utilizing large signal inputs can generate results which imply a wide variety of special signal processing functions which are symmetrically located around the test spot, or are located parallel to a test edge for a short distance, projected on the retina. Every one of these situations reviewed by the author has been

---

[20]Dacey, D. & Lee, B. (1994) The 'blue-on' opponent pathway in primate retina originates from a distinct bi-stratified ganglion cell type. Nature, vol. 367, pp. 731-735

more reasonably explained as an artifact of the large signal situation and the limited capability of the cardio-vascular matrix to supply the neurons of the photoreceptor and/or inner nuclear layer with adequate metabolic supplies. This starvation or fatiguing of the neurons surrounding the test spot is characterized in the first order by a circular symmetry of the observed effect about the test spot--although its geometry may be more complex if second order effects are involved such as the displacement of the inner nuclear layer neurons in the fovea relative to the location of their associated photoreceptors in the foveola--or of the location of an arteriole near one side of the test spot location. These phantom paths are seldom if ever reported under small signal conditions, i. e. conditions utilizing the same circuit connections but without significant overload.

The above paragraph is not meant to disallow or even to disparage these artifacts. Many of them will be discussed in detail in subsequent chapters after the underlying model has been more thoroughly elucidated. At that time, they can be understood more coherently in terms of the operation of the underlying processes.

Another phantom interpretation of a real path is the common one concerning a path representing a light decrement (off-center neurons)[21]. Psychophysicists frequently propose such a path based on their behavioral responses and on intuition. However, they have difficulty separating the luminance and chrominance responses of the system in the laboratory and they have seldom controlled the spectral content of their test stimuli adequately. Electrophysiologically, it is easy to measure a negative going signal in response to stimulation in the chrominance channels and compare it to the positive going signal in the luminance channel. However, this negative going signal is not related to the amplitude response of the overall system. It can be driven to zero by introducing an additional stimulus at a wavelength complementary to the light causing the negative going signal (in one of the chrominance differencing channels). Contrary to the musings of Jung referenced above, teleology has not surfaced a requirement for an off-center signaling channel associated with stimulus intensity.

13.2.7 Discussion

The ideal method of proceeding at this point would be to separate all of the signal paths in the eye into several sub-groups; straight through, divergent, convergent and feedback, etc. (excluding phantom paths for the moment). It would then be possible to map the location of all of these separate types, possibly mapping the input locations related to every dendrite of every convergent neuron--and then mapping the dendrites diverging from a given axon. Obviously, the above procedure is and probably will be a monumental task for a long time to come. However, having conceptualized this procedure, it is possible to develop the characteristics of the different types of principle (first order if you will) paths.

The above discussion must necessarily be expanded to address different signaling domains; i. e. at least geometric and chromatic (possibly temporal). It may seem surprising but it appears from this authors perspective that, after the straight through signal path, the chromatic domain is easiest to address.

The above discussion develops the idea of several different signal path types occurring in a single region of the retina simultaneously--utilizing the concept of overlays. This approach provides a broader conceptual base than that of Sterling et. al. [1988 in figure 1.33 & 1.34 of Rodieck] Sterling's approach requires the investigator to specify the types of paths which are conceivable before the data is analyzed, a virtually impossible task. That approach also leads to the very human weakness of dividing observations into two groups--even if four or more groups are actually present. Sterling's approach also leads to a statistical description of the signal paths in a specific area. As illustrated in his figures, this leads to non-integer average values for a process which inherently involves integers.

13.3 The foveola signal path

In defining this simplest of retinal signaling paths, it was found that the literature contained very little detailed information about the operational characteristics of the INL neurons in the higher vertebrates. This is undoubtedly because of two factors; the extremely high impedances involved which cause most test equipments to fail and the significant difficulty of probing for contact to a single small neural junction. Many experiments have picked species exhibiting large photoreceptor cells in order to simplify the experimental procedures.

---

[21]Jung, R. (1973) Visual perception and neurophysiology. *In* Handbook of Sensory Physiology, Vol. VI, No. 3, NY: Springer-Verlag, pp 17-18

It is interesting to note that Figure 3 of the paper by Werblin & Dowling[22] (1969) involving the mudpuppy is being widely reproduced without the caveat that the upper two rows of waveforms are clearly not related to the waveforms of the receptor and horizontal cells. They actually exhibit the rise time of the test set (roughly one second as given by their approximate values for the input of their FET amplifier--10^{13} ohms resistance and 10^{-12} farads capacitance for a rise time of 10 seconds open circuit). They were less explicit concerning the capacitance of their test probe. However, it is nearly impossible to achieve a test probe tip shunt capacitance of less than 5×10^{-12} farads. They indicated these limitations when they said "Although negative capacitance was used to increase the bandwidth, the system was always band-limited by the high distributed capacitance and resistance at the pipette tip."

It is also important to note the necessity of measuring what is called the a-wave and not the b-wave. The a-wave, occurring within milliseconds or less of the input illumination is due to the cell under test. Brown, Watanabe & Murikami[23] classify the a-, b- and c-waves as originating in the receptors, the INL and the RPE respectively (These relationships are not supported by the more detailed definitions of this work). The so-called b- and c-waves, frequently occurring 10's to 100's of milliseconds after the stimulus, appears to be due to the operation of the entire signaling complex. Their nature depends strongly on the position of the signal return and ground leads of the test set. The ear, temple, conjunctiva have all been used for the return signal lead. Brown et. al. suggest contacting the vitreous humor instead of the eye cup in in-vitro explorations.

It appears that many of the neural cells in the retina are extremely good insulators, in the 10^{12} ohms range, and it is quite possible for electrons to move along their (internal or external) surfaces very easily. This characteristic may be key to understanding their overall operation.

13.3.1 Photoreceptor cell output

[Very limited direct data is available about the output of the photoreceptor cell. Most of the data is inferential based on the signals measured at the output of the bipolar or other cells occurring later in the signal path.] The output is clearly an analog (electrotonic) signal and the cell is frequently given the name of the waveform generator (although the determining characteristics of the signal are a result of the transduction process in the OS.

13.3.1.1 Data for the blowfly

As indicated above, many experimenters choose species with easily contacted photoreceptor cells. The non-vertebrates offer opportunities in this area. Kuiper and Leutscher-Hazelhoff[24] provide a wealth of information about the photoreceptor cells of the blowfly, *Calliphora Erythrocephala.* This species is known to respond to light amplitude modulated at 300 cycles/sec. They explored the photoreceptors of this species extracelluarly in terms of signal levels, linearity and intermodulation for a series of test inputs using different modulation frequencies including two superimposed modulation frequencies simultaneously. They also provide a good survey of other data up to that time.

[differentiate between voltage and current in the next para]
Although they choose to say that the average values of their output versus input characteristic do not quite form a straight line on a graph of output versus log input, it is quite easy to draw a straight line through their error bars. From this, it will be assumed that the electrical output versus photon input is in fact logarithmic as usually reported for this kind of data. They also show the output is typically in the 2.0 millivolt range.

Pulse amplitude tests: Their Figure 6a illustrates an extracellular response to a light flash of 300 msec. It indicates an overshoot in the output signal of about 25% and a rise time of between 10 and 20 milliseconds to a pulse input of unspecified amplitude. They did not provide any indication of whether this overshoot was due to the eye under test or to the test set. It was amplitude sensitive based on the curves in figure 6b. The overall waveform appears to indicate some phase delay (leading edge overshoot and trailing edge undershoot) or zero frequency response at zero frequency.

---

[22]Werblin, F. & Dowling, J. (1969) Organization of the retina of the mudpuppy...Intercellular recording. J. Neurophysiol. 32:339-355
[23]Brown, K. Watanabe, K & Murakami, M. (1965) The early and late receptor potentials of monkey cones and rods. Symposia on Quantitative Biology, vol. XXX: Cold Spring Harbor Laboratory
[24]Kuiper, J. & Leutscher-Hazelhoff, J. (1965) Linear and nonlinear responses from the compound eye of *Calliphora Erythrocephala.* Symposia on Quantitative Biology, vol. XXX: Cold Spring Harbor Laboratory

Sinusoidal amplitude tests: Signals were recorded faithfully at frequencies up to 220 cycles/sec. There was an indication of roll-off at low frequencies as well as at high frequencies.

Intermodulation distortion tests: Using an input signal consisting of two frequencies, 20 and 150 cycle/sec, each modulating the nominal light intensity by the same modulation factor, good linearity was obtained at 10% modulation but linearity was reduced at 28% modulation. This is a good example of small signal linearity and large signal nonlinearity caused by the logarithmic input-output relationship.

Frequency Response: They gave an equation for the frequency response with a zero pole in the numerator and five poles in the denominator; simple poles at 30 and 400 and a triple pole at 1200 cycles per second.

Phase delay tests: They computed a delay between optical stimulation and electrical output of 5.5 msec. when using their equation with five poles in the denominator. However, they did not propose an explanation for this delay. Instead, they proposed adding an additional four poles in the frequency response equation.

The above data appears quite consistent. There is some question whether their data is sufficiently accurate statistically to draw two of their conclusions:

+ the conclusion that the rolloff is "about 30 dB per octave"

+ the conclusion that the apparent 5.5 msec of delay can best be accounted for by adding an additional 7 degrees of freedom to the process

Combining these two conclusions they define a photoreceptor transfer function involving 12 degrees of freedom in order to account for the observed frequency response. This appears questionable, especially since they read the maximum rolloff from only their maximum illumination case, i. e. in the non-linear region where their analytical techniques are of questionable validity. They also did not present or factor out the transfer characteristic of their test set.

It may be of value to consider whether the photon transduction process could possibly involve a delay of up to 5.5 msec. The transduction structure is known to be a slow wave structure; how slow becomes the question.

13.3.1.2 Data for the turtle

13.3.1.3 Data for the rat

Cone[25], working with an albino rat confirmed much of the work of Brown et. al. tabulated above. Also working with short duration flash illumination, he also observed a photoreceptor output amplitude limited to about 2.0 mV.

13.3.1.4 Data for the monkey

Brown et. al.[26] provide an extensive review of the photoreceptor signal from monkey with special attention paid to 1) isolating photoreceptors in the fovea and 2) placing the return electrode in the vitreous humor. The configuration was labeled an LERG. The goal was to minimize crosstalk from other photoreceptor cells and subsequent signal processing. They further divide the a-wave into an early and late receptor potential; indicating the early receptor potential exhibits a delay of less than 25 μsec after the flash of illumination. They took precautions against electromagnetic interference from their flash lamp power supply. However, the nature of the P/D process does not support the existence of a component of the photodetection process occurring within 25 μsec. of the flash illumination. Although most of that paper involved very short pulse illumination, their figure 6 shows a 300 msec. pulse exposure with electrical pulse amplitudes of 4.0 mV at the inner segment.

13.3.1.5 Data for the human

13.3.1.6 Summary

---

[25]Cone, R. (1965) The early receptor potential of the vertebrate eye. Symposia on Quantitative Biology, vol. XXX: Cold Spring Harbor Laboratory

[26] Brown, K. Watanabe, K. & Murakami, M. Op. CIT.

There are comments in several of the above papers which could be related to the photoreceptor neural portion actually operating in a "current mode", i. e. some of the very short pulses occurring during the a-wave could be related to the initiation and culmination of current transfer with the actual measured voltage being that found on the input node of the next nerve.

Table I Photoreceptor Neuron Characteristics

Phylum	Species	Max. output	3dB freq.	Test*	Source
Arthropoda	Calliphora Erythrocephala	+2.0 millivolts	30 hertz	E	Kuiper et al '65
	Limulus	50-70 mV.		I	Benolken '65
Mammalia	Macaca irus (monkey, fovea)	+4.0 mV.		E	Brown et al '65
	(albino rat)	+2.0 mV.		E	Cone '65

* Some of the tests involved probing intracelluarly (I) and others involved contacting the cells extracelluarly (E).

In summary, the Photoreceptor cell delivers a signal at its pedicel that can be described as negative going and probably of the same polarity as the input signal at its dendritic structure. This is because the amplification process in the photoreceptor appears to involve an avalanche process. The total current appearing at the pedicel is generally in the 30-100 pA range. This current may be shared among a number of pedicel substructures. However, the voltage range ascribed to the individual photoreceptor is negative going upon the application of light and from 0 to 500 μvolts in amplitude based on ERG data. The current and voltage level at the axon pedicel does appear to be species dependent.

The signal is highly logarithmic due to the style of amplification occurring in the photoreceptor. The impulse response of the photoreceptor is well characterized by the product of the P/D equation and this logarithmic function. Therefore, the signal waveform appearing at the pedicel can be completely described by the product of the irradiance waveform and the impulse function. Although, the mathematical treatment is essentially linear, the differential equation of the photoreceptor does have coefficients which are a function of the irradiance level. Therefore, the correct calculation of the small signal waveform riding on a background irradiance level, does require the background level to be factored into the overall calculation. Similarly, the transport delay associated with the P/D equation is also a function of the state of the photoreceptor cell at the start of the small signal irradiance. This transport delay must be calculated based on the background level.

13.3.2 Bipolar cell output

13.3.3 Signal matrixing cell outputs

By reviewing the papers of Werblin & Dowling[27] and Tomita[28] it is possible to obtain some operating characteristics of the signal processing neurons. It is widely reported that the quiescent output level of these neurons is quite variable but generally in the region of 20-40 millivolts with respect to the eye cup or the intact eye sclera. The output signal swing from this quiescent value varies by function and position in the signal processing path. It appears to be about 5-8 mV. for the photoreceptor cells and those frequently labeled bipolar cells and 10-12 mV. for the cells labeled horizontal and American cells. When these latter cells are not operating differentially, the signal level is usually negative going, i.e. hyperpolarizing.

[[use also Wilson, H. (1997) and Dacey & Lee when talking about bandpass of signal neurons]]

13.3.3.1 Horizontal cell output EMPTY

13.3.3.2 Amercine cell output EMPTY

[27] Werbling, F. & Dowling, J. *ibid.*
[28] Tomita, XXX

13.3.4 Ganglion cell output

The output of the ganglion cells is quite well characterized; when associated with the corresponding input characteristics, it is possible to provide a detailed description of the ganglion cells functional performance. Byzov[29] describes clearly an important fact about the ganglion cells: "..from the neurophysiological point of view, the ganglion cells have properties of classical neurons (e. g., motoneurones)." Thus they are transitional in that they accept electrotonic inputs and generate action potential outputs.
[data]
There are many measured waveforms of the output of the ganglion cell, usually superimposed on the input waveform, that show the variation in frequency of the output versus the input. However, the data of Purple & Dodge[30] is particularly clear and amply illustrates the fact that the output waveform is of the time duration modulation type; i. e. of the phase modulation and not of the frequency modulation class. **Figure 13.3.4-1** [Figure **13.3-xx**]

Based on this data, it is possible to describe the ganglion cell as a relaxation class of oscillator providing an output signal which modulates the input information into a time-delay modulation form of pulse train.

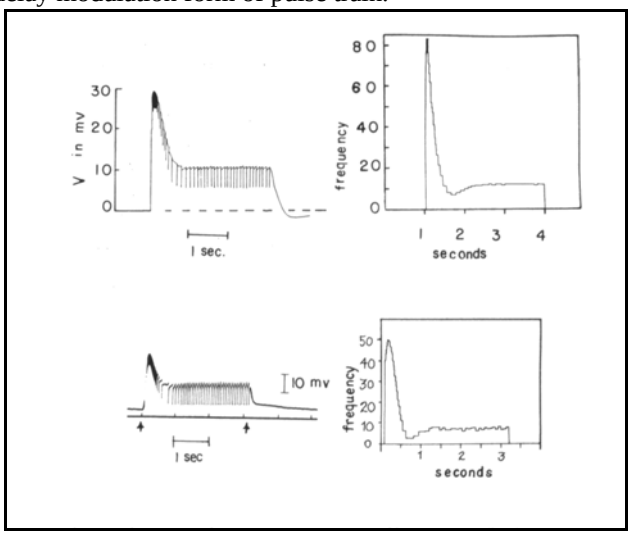

Figure 13.3.4-1

13.4 The "straight through" model (without temporal modulation)

[rewrite, add in non-temporal modulation and address foveola paths]
Following the above discussions, it is now appropriate to develop a model of the complete straight through signal path of the retina at the circuit level, beginning with the transducer associated with the photoreceptor cell and ending with the ganglion cell.Although probably not encountered in practice, this construct is frequently referred to in the literature (i. e. a direct neural connection to the brain from a photoreceptor in the central fovea); from it, a number of real constructs can be defined. **Figure 13.4.1-1** illustrates the circuit involved using conventional electronic notation. The activa symbol with a B above the line is used to indicate a biologically active semiconductor device or Activa as defined earlier. This circuit will be discussed from a variety of perspectives because it is key to understanding how the various signaling channels of vision works.

Although, the circuit diagram in **Figure 13.4.1-1** appears conventional, it is not. There are significant features not encountered in conventional circuit diagrams except under very special conditions. First, the entire circuit is immersed in a fluid in which ionic transport rates are significant. This means that the circuit operates like a high frequency radio frequency circuit mounted on a less than perfect ground plane. Attention is called to the master ground in the lower right corner. All of the other grounds in the diagram exhibit a resistance and/or a transport delay relative to the master ground. Second, note that all horizontal and all vertical lines in the diagram, other than the standard activa symbols, are "electrolytic wires" exhibiting a very restricted signal transport velocity, much less than about 0.6 times the speed of light found in most man-made electrical circuits. Thus, although this circuit operates at a maximum frequency of less than 1000 cycles per second, it must be evaluated in a manner similar to that of a printed circuit mounted on a lossy ground plane.

---

[29]Byzov, A. (1965) Functional properties of different cells in the retina of cold-blooded vertebrates. In Cold Spring Harbor Symposia XXX. NY: Cold Spring Harbor Laboratory of Quantitative Biology. pg. 547
[30]Purple, R. & Dodge, F. (1965) Interaction of excitation and inhibition in the eccentric cell in the eye of Limulus. *ibid.* pg. 529

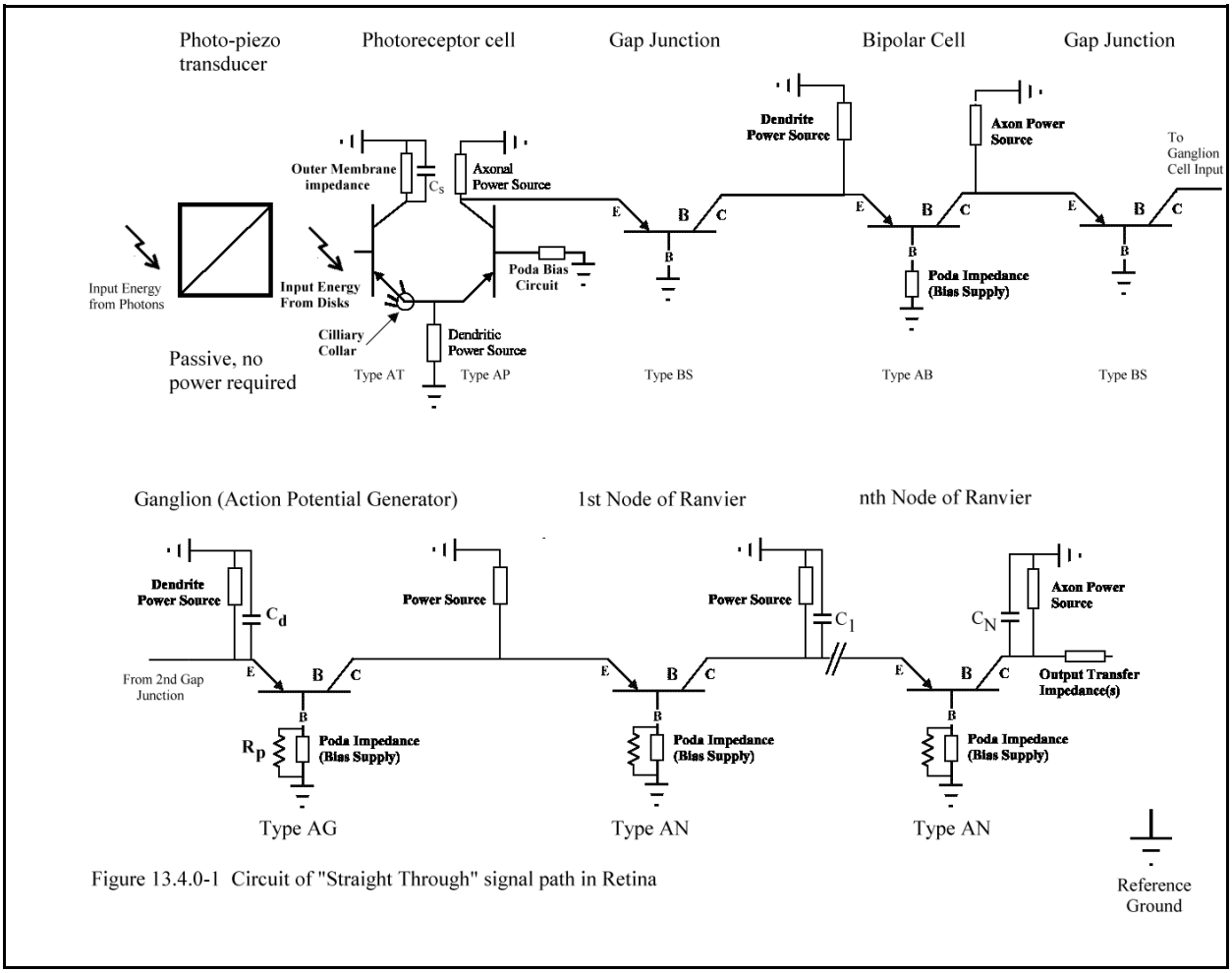

Figure 13.4.0-1 Circuit of "Straight Through" signal path in Retina

Figure 13.4.1-1 The circuit diagram of the "straight through" signal path of the retina.

This simple "straight through" signal path can be described in terms of one transducer assembly, constituting the Outer Segment, one Photoreceptor Cell, one Bipolar Cell, and One Ganglion Cell (which includes n Nodes of Ranvier) and two gap junctions connecting these elements as shown. Alternately, the path can be described as consisting of a photo-piezo transducer, a number (usually 9 in humans) of individual "super-gain" activas of the Type AT connected in parallel to a single Type AP activa, the group operating in a differential pair configuration. Note the 9 individual wires pass through the ciliary collar of the photoreceptor cell. The output of this differential pair is passed through the Outer Limiting Membrane to a Type BS activa operating as a unity gain current amplifier to a second unity gain current amplifier which acts as an isolation device in more complicated versions of this signal path to be discussed later. The output of this amplifier is passed through a second Type BS activa to a time delay oscillator circuit, employing a Type AG activa, that generates a pulse in its output circuit, $V_C$as soon as the analog voltage at its input, V_{EB} exceeds a threshold value. If the analog voltage remains above this threshold value, the circuit will generate a series of pulses separated by a given time interval. If the analog voltage should rise further, the series of pulses will have a shorter time delay between them that is inversely proportional to the amplitude above threshold of the analog voltage. The pulses generated by this oscillator will be passed to one or more pulse repeaters until the signal arrives at a time delay discriminator circuit located in the brain. Each of these pulse repeaters will generate an output pulse in response to an input pulse. The shape of the output pulse is controlled by the parameters of the individual repeater circuit. However, the difference in shape between the output pulse and the input pulse is normally not noticed except under very careful measurement.

The circuit as shown does not exhibit any voltage amplification as the entire circuit is based on the current generated in response to a photon flux due to illumination of the photo-transducer. More worthy of note, the circuit does not employ any resistor elements, except possibly in the shunt to the Poda supply of the time delay oscillator circuit.

Thus, at the low operating frequency of this circuit, it generates essentially no heat through its operation. This is achieved through the unique nature of the power sources shown, both in the axonal leads, the dendrite leads and in the poda leads, and in the outer membrane impedance associated with each “super gain” activa.

All of the activa can be described as of the “p” type transistor. Thus, internal to each activa, the dominant charge carrier is the “hole”, not an electron and not an ion. Further more, the emitter, E, is forward biased when a negative voltage is applied between the contact E and the base contact B in the poda circuit. Correspondingly, the output circuit is reverse biased when a negative voltage is applied to the collector contact, C, relative to the base contact, B. These voltages are provided by metabolic processes associated with the biological cell walls and putatively associated with the metabolites ADP, ATP, cGMP, etc. The voltage is created in regions of the cell wall where metabolites may flow freely in the area adjacent to the wall; thus, junction regions and heavily myelinated regions are not involved. The free flow of metabolites is important because if the supply of metabolites is restricted or inadequate under high signal conditions, the voltage-current characteristic of the battery will be impacted. This in turn can affect the observed signal amplitude at a given location in the circuit. Under normal conditions, the metabolic processes generating a voltage are reversible. The result of this reversibility and the area of the cell wall participating gives these power sources a characteristic that is described electrically by a loss free battery in series with a perfect diode. The voltage-current characteristic of the diode varies directly with the area of cell wall involved. The reversibility of the electromotive processes involved account for the unique power efficiency of the visual system. *There is nearly zero power loss in the form of heat in the vision process.*

---

use pieces of this in above section, some is outdated

13.5.2.2.1 The luminance or “straight through” signal path

Expanding the block diagram of **Figure 13.4.1-2 [Figure 13.5.2-1]**, the straight through path can be presented in considerable detail**. Figure 13.4.1-2 [Figure 13.5.2-2]** shows this entire luminance signal path at the circuit component level. The OS is shown as a passive transducer containing two sub-elements; that associated with the photoexcitation/de-excitation (P/D) process and that associated with the translation process. This second element feeds the common podium connected activa of the IS. This circuit in turn feeds any interstage amplifier (if present). If present, this interstage amplifier is also connected in the common podium configuration and feeds the following ganglion cell. The ganglion cell consists of another common podium connected biological activa operating in a relaxation oscillator mode and used as a line driver to excite one axon incorporated into the optic fiber exiting the eye. **Figure 13.4.1-2 [Figure 13.5.2-2]** also indicates by dotted lines where, the connections are made to accommodate expansion of the signal processing stage to accommodate additional chromatic and/or appearance signal processing.

Several interesting statements can be made about this circuit configuration:

First, the amplification stages are all directly coupled. This means their is a direct conductive path for electrons from the front end of this circuit at the translator element to the other end at the ganglion cell.

Second, the input stage (Stage 1-1) is entirely passive and does not consume any power derived from the metabolic system of the eye.

Third, the entire signal chain of the straight through path involves no inverting amplifiers.

Fourth, there is no requirement for power to be provided to the individual stages in a cascaded series of direct coupled amplifier circuits. All power can be provided from the last stage in the chain. Thus, so-called pull-up resistors, which are commonly used in manmade binary circuits, at the axon port of each biological activa in this circuit are optional. However, review the material in Chapter 11.4 in this regard before adopting this approach.

Figure 13.4.1-2 The entire luminance signal channel shown at the component level EMPTY.

Fifth, as developed above, the circuit in front of the ganglion cell does incorporate a pre-emphasis circuit that leads to a rapid turn on of the pulse train in response to sudden application of irradiance. Conversely, this pre-emphasis circuit rapidly quenches the pulse train upon the cessation of irradiance. For less pronounced changes in irradiance, the circuit acts in the normal manner.

13.4.1 The Photoreceptor Cell

As in any sensing system, the first stage of signal processing circuitry is uniquely important and specialized. It must be as sensitive as possible to the desired signal yet reject extraneous signals. The photoreceptor cell of vision is highly optimized to accomplish this task. This causes it to exhibit a number of special characteristics as well. The electrical (neural) portion of the photoreceptor cell is described as a differential pair with a specialized activa on the input side of the pair. This specialized activa is used in a common emitter circuit with an open base lead. It is operated like a photo-transistor except it is exposed to quantized piezo forces instead of photons -- as will be explored more in the next section. The collector to emitter voltage is very high as a percentage of the collector to emitter breakdown voltage in this "super gain" circuit. This causes the device to operate in an avalanche amplifier mode with small signal current gains, h_{fe}, relative to the input quanta on the order of 2500 to 4000. To achieve this high gain, it is absolutely mandatory that the voltage supplied to the activa be as close to but not exceed the breakdown voltage under any condition. This is a key feature of the differential pair connection. Notice that the collector of the activa is connected to ground through an impedance instead of a power source including a battery; i.e., the battery voltage if any is near zero. The power supplied to the "super gain" activa is derived from the dendritic power source. This source in conjunction with the poda bias circuit is set to create a current of typically 20 na. through the dendritic power source. Note the axonal power source is connected so as to reverse bias the collector on the right hand activa and therefore plays no role in the determination of this current. At this current level, the voltage between the two emitters of the pair and the local ground connection is approximately 5 mV. In the absence of any input excitation, all of this 20 na. passes through the right hand activa. Upon stimulation of the left hand activa (or any of the nine activa actually in parallel), some of this current passes through the left hand activa and the current in the right hand activa is decreased accordingly. In any case, the voltage at the common emitter connection remains constant.

The gain of the "super gain" input stage of the photoreceptor cell is highly dependent on its collector to emitter voltage. If this voltage is reduced, the gain falls precipitously. As current begins to flow through this amplifier, the voltage drop across the diode in the Outer Membrane impedance begins to rise; this rise reduces the collector to emitter voltage and the gain of the circuit begins to drop. This action results in the "super gain" amplifier being one of the principal elements in the adaptation process in vision. If a significant capacitance, C_s, appears across the Outer Membrane impedance, the time constant of the diode characteristic and the capacitance defines a time constant. This time constant plays a significant role in any droop encountered in the step response of the photoreceptor cell for long step durations. Because of the rapid reduction in gain with the long term average current flowing through the device, the steady state output of this stage is constant over an input excitation range of over 1000:1. Yet, the differential gain is still reasonable and the device still supports Weber's Law. With the model of the photoreceptor cell now available, it is possible to perform laboratory experiments to verify the operation of the "super gain" activa and the characteristics of the Outer Membrane impedance.

The perturbation of the quiescent state of the differential pair of active devices in the photoreceptor cell is a source of considerable confusion in the textbook literature of vision. The situation is summarized in **Figure 13.4.1-3 [Figure 13.4.1-1]** where the voltages measured at the two collectors are shown. Under quiescent (dark) conditions, the collector of the left, "super gain" activa is at essentially ground potential with respect to the local ground and the collector of the right activa is at a nominal negative voltage of about 70 mV. while a current of 20 na. is passing through the device and resulting in a voltage drop across the diode impedance of the axonal power source. The voltage of the axonal power source is about 90 millivolts. When a step change in excitation occurs, the current through the "super gain" activa increases causing a positive going voltage change at the collector due to the voltage drop across the outer membrane impedance. In the biological laboratory, this positive going change is called a depolarization (under excitation). Simultaneous with the increase in current through the "super gain" activa, the current through the right hand activa decreases. This causes a decrease in the voltage drop across the diode impedance associated with the axonal power source and the voltage at the collector approaches the supply voltage, becoming more negative. In the biological laboratory, this negative going change from a previous negative value is

called a hyperpolarization (under excitation). Thus, a single photoreceptor cell can simultaneously exhibit both a depolarization and a hyperpolarization (under excitation) depending on where the electrical probe is positioned to measure the operation of the cell. If the probe is in the vicinity proximal to the right hand activa (near the output axon), a hyperpolarization will be measured. If the probe is in the vicinity of the dendritic structure (anywhere near the Outer Segment), a depolarization will be measured. This situation is true for all photoreceptor cells in the animal kingdom. The confusion in the textbooks was caused by XXX making measurements distal to the right hand activa in an insect and reporting a depolarization under excitation at that point while other experimenters measured their signal (generally on vertebrates) proximal to the right hand activa and reported a hyperpolarization under excitation. One author put these two measurements side by side and announced that there was a fundamental difference in the process of transduction between protostomic and deuterostomic animals. Subsequent authors have repeated this claim without verification.

The above description of the operation of the photoreceptor cell is completely consistent with the work reported by Baylor et. al.[31] even to the point of breaking the connection between the Outer Segment and the Inner Segment and measuring the current at that point. This was equivalent to breaking the circuit of Figure 13.4.0-1 at the Ciliary Collar and measuring the current flow from the dendritic power source to ground. In both cases, the current measured was the maximum current available from the dendritic power source. Their work also appears to demonstrate how the dendrites passing up along the sides of the Outer Segment (in the serrations) made contact with each disk in the stack and discharged current through the outer membrane of the dendrite at each disk in proportion to the level of excitation at that location. Their measurements indicate that the absorption of light and its transfer to the dendrites via piezo action is very uniform relative to position in the disk stack. They also reported the extreme sensitivity of the photoreceptor cells to piezo forces during the selection of an OS for their experiments.

Figure 13.4.1-3 The circuit diagram of the photoreceptor cell EMPTY.

The use of a differential amplifier in this model provides a different interpretation of the effect of cilium breakage than that assumed by Baylor et. al. on page 593. There is no need for the OS to experience an inward current flow in the absence of illumination. In the absence of illumination, the current flow from the dendritic source passes through the other half of the differential amplifier pair and establishes the quiescent collector current and voltage at the output of the photoreceptor cell, up to 20 pA and about -70 mV. Thus, the output current at the terminus of the axon of the photoreceptor, is greatest in the absence of illumination. In the presence of illumination, the current at the terminus is reduced as the current emanating from the OS into the Inter-Photoreceptor Matrix, IPM, rises. In electronic terms, at *maximum* illumination, the current emanating from the OS is in saturation and the output activa of the photoreceptor is in cutoff, i. e. the collector voltage of the output activa is equal to the supply voltage.

13.4.1.1 Noise performance of the Type AT activa

The sensitivity of silicon based and germanium based transistors to piezo and photo stimulation is well documented; the minimum excitation energy is 1.1 eV for silicon and 0.72 eV for germanium at room temperature. No equivalent value could be found in the literature for the excitation of neural tissue. However, based on the available spectrographic information, it appears that the value for the neuron at 98.6 degrees Fahrenheit (37 degrees Celsius) is not less than 2.0 electron-volts. This value controls two performance parameters of interest, the longest observable spectral wavelength and the noise level of the visual system. By having the minimum excitation energy as high as 2.0 electron volts, the visual system is virtually immune to thermally generated noise signals. The RMS thermal

[31]Baylor, D. Lamb, T. & Yau, K.-W. (1979a) The membrane current of single rod outer segments. J. Physiol. vol. 288 pp. 589-611

noise level of animal tissue at body temperature is only 0.027 electron volts[32]. Thus, only thermal electrons having a value of $\sigma = 2/0.027 \sim 74$ relative to the general population can cause thermal excitation of a carrier in the Type AT activa, even when operating under "super gain" conditions. *Thermal noise is not significant in the circuitry of vision proximal to the input to the first activa.* The noise performance of the transduction process will be explored separately below.

13.4.1.2 Signal performance of the Type AT activa

With a minimum excitation energy of not less than 2.0 electron volts, the vision system is capable of receiving excitation from photons at any wavelength shorter than about 600 nm. without employing special (or unusual) techniques. Therefore, photons absorbed in conjunction with the spectral absorption bands of the UV-, S- and M-channels can be expected to cause excitation of the photoreceptor input activa without any difficulty unless a significant portion of the incident photon energy is lost in the transduction process.

13.4.2 General Circuit Characteristics

13.4.2.1 The Conductors in the Path

The conductors found in the straight through, and other, paths are not metallic wires but electrolytes confined by cell walls. The charges passing along these electrolytes may be electrons or ions. In either case, there transport velocity is a function of the electrolyte, its concentration and the species of the charge carrier. In general, the charge transport velocity is low relative to conventional electrical circuits and must be considered in all evaluations. In particular, in all feedback circuits, the finite transport delay associated with the conductor in the feedback path must be accounted for.

It appears that the normal range of transport velocity in the conductors may vary with the molarity of the electrolyte and the level of myelination of the cell wall; the value ranges from XXX to 18 microns per microsecond for large axons (0.5 mm in diameter) reported by Young in 1936.

It appears that the transport velocity of the charges in the Interneural Plasma Matrix may also be in the above range. Thus, any charge carrier leaving a cell at one location and re-entering the cell at another location will encounter a delay due to the finite charge transport velocity of this plasma.

13.4.2.2 The voltage sources

It is probable that all of the circuitry of the visual system is DC coupled and it is therefore theoretically possible to power the entire signal path from a single power source. However, this generally imposes a number of awkward constraints on the circuitry. Furthermore, it appears that each cell wall is capable of generating/supporting a voltage gradient across it and the limited conductivity of a cell plasma allow a different voltage to exist at different locations along an axon or dendrite. Therefore, the circuit diagrams for the straight through and other circuit paths are shown with multiple power sources. Detailed laboratory measurements may demonstrate that there may be some redundancy in this approach.

Reviewing the literature globally, it appears that the maximum voltage created by any individual source in the visual system is on the order of 0.100 volts or less. This is an order of magnitude lower than the voltage used in current low power microcircuit computer chips; making the visual system a truly low power microcircuit. Individual cell walls have been measured under a variety of conditions, usually by measuring the voltage of the plasma inside a cell versus a reference potential that may or may not be near the exterior wall of the cell. As a rule, the plasma of the axonal portion of a cell (which is easier to measure than the dendroplasma because of physical size) exhibits a voltage of -90 millivolts relative to the reference under zero current flow conditions (normally called cutoff); and typically -70 millivolts under quiescent conditions, i. e. nominal current flow through the associated activa collector. This gives a normal operating range for the collector voltage of an activa of about 20 millivolts in the hyperpolarizing direction and about 70 millivolts in the depolarizing direction.

There appear to be cell walls that generate considerably smaller net voltages than -90 millivolts; particularly associated with the various poda supplies.

---

[32]Rodieck, R. (1973) The vertebrate retina. San Francisco: W. H. Freeman pg. 914

13.4.2.3 Fabrication

Although it is not directly relevant, it is worth noting that the circuit in Figure 13.4.0-1 could easily be implemented as a man-made silicon based microcircuit using conventional printing, etching and plating techniques. In the case of preparing the circuit biologically, it appears to be equally practical since each neuron is a stand-alone structure isolated in a inter-neural fluid except where it is intentionally brought into close juxtaposition with a second neuron for the purpose of creating a "gap junction" which is in fact a biological transistor in itself. Even the ganglion cell is easily produced by establishing a high capacitance between the emitter terminal of an internal activa and the local ground. As shown in Chapter 10, it is also easy to create a differential amplifier within a photoreceptor cell.

13.4.2.4 Impedance levels

The Outer Membrane impedance with its shunt capacitance associated with the "super gain" activa, along with other circuit element combinations, can give us an approximate value for the impedance level of the circuits of the retina. Using Baylor, et. al.'s value for the maximum current supplied by the dendritic power source as typically 20 pA, recognizing that this current is divided more or less equally by the number of dendrites passing through the Ciliary Collar, and that a voltage drop of even 5 mV. will probably affect the current gain of the stage, The impedance level associated with a single dendrite is about 2,200 megohms; the impedance associated with all of the dendrites in parallel is about 250 megohms; these are values that tax man's ability to design appropriate electrical probes, especially if this resistive component of the overall impedance is shunted by a capacitance able to provide a one second time constant, i. e. a capacitance of about 4 nanofarads. For reference, Baylor et. al.[33] measured the total current passing out of a single OS and indicate in their Text-fig. 2 a time constant after current saturation for a complete OS of about 2 seconds in the toad, *Bufo marinus* under poorly controlled temperature conditions, listed as 18-25 degrees Celsius.

The dendritic power source in the photoreceptor supplies approximately 20 pA of current at a voltage drop of about 5 mV. also. Therefore, the resistive component of the diode characteristic at 5 mV. is in the 250 megohms range also.

13.4.3 The Bipolar Cell

The Bipolar Cell plays a minor roll in the straight through path model because its role as an impedance isolator is most important where multiple paths either converge or diverge. However, its inherent time delay is important and must be accounted for. The activa of the cell operates electrically in the grounded base mode which provides a charge gain of very slightly less than 1.00 (typically 0.99 or higher). However, there may be a significant impedance change between input and output circuits that can provide a significant voltage and power gain if the output impedance is higher than the input impedance. Here again, this capability is not used in the straight through path configuration.

In this path, the bipolar cell operates as a simple analog (electrotonic) buffer amplifier, providing unity gain between its input and output, no signal inversion, and a transport delay of about XXX microseconds due to its typical length of XXX microns (in the human eye). The quiescent voltage applied to its collector is approximately the same as for the other cells in the path so it is relatively difficult to ensure the signal acquired with a probe is from a photoreceptor cell or a bipolar cell. Similarly, because there is no signal inversion, it is difficult to be sure that probe data is from the emitter or collector circuit unless DC voltage measurements are made to an accuracy of millivolts or less.

13.4.4 The Gap Junctions

As indicated in the introduction to this section, gap junctions exhibit the same electrical characteristics as other activa containing amplifiers found internal to various neurons. The major difference is that there appears to be no cell wall enclosing the junction area of the activa. Thus, any bias voltage applied to the base connection of the activa must be due to extracellular processes if any. This is not a problem since the only requirements on the gap junction amplifier are that the emitter to base voltage encourage current flow from the emitter to the base and that the collector to base voltage discourage current flow from the collector to the base. These conditions are easily met with

---

[33] Baylor, D. Lamb, T. & Yau, K-W. ibid.

the base at local ground potential. Under these conditions, the activa of the gap junction will transfer current from the emitter lead to the collector lead with nearly 100% fidelity in both amplitude and temporal characteristics. Any number of gap junctions can be incorporated into a signal path.

----xxx
[move next two paragraphs to Part D or elsewhere]
Close review of the synapses found in the retina will show that they all satisfy the presently defined requirements for electronic synapses. They all involve so-called electrotonic coupling and use an extremely small gap between the two participants (less than 100 angstroms). Davson[34] goes so far as to say with regard to these electronic synapses in the retina; "A third type of contact, namely the gap-junction, is common, . . . "

A major discovery of this work is that the lowly synapse between two neurons is in fact an active electrolytic semiconductor device. It is of equal functional importance to the nearby neurons.

13.4.5 The Ganglion Cell and its subdivisions

13.4.5.1 The basic Ganglion Cell

The functional properties of the ganglion cell are the same as any other except for certain optimizations. The basic amplifier involves a grounded base activa biased into a critical condition with a large capacitance between either the emitter (or the collector) and the local ground, and an impedance in the poda circuit connected to the base. The impedance in the poda circuit causes an internal positive feedback condition which causes the transfer characteristic of the overall amplifier to exhibit a "U" shaped bend in its transfer characteristic. The critical condition is that the load line associated with the output circuit crosses the "U" in the transfer characteristic of the amplifier twice. **Figure 13.4.5-1 [Figure 13.4.0-1]** shows the capacitance in the emitter lead because of the lack of any data to make a definitive determination of where it is located. There may or may not be a real resistor located in the poda circuit, it is possible that the impedance of the diode associated with the biological battery provides the needed resistive component of the total impedance. A circuit of this type is well known in the literature and discussed more fully in Appendix B. It provides a pulse output with a shape determined by the product of C_d and R_p every time the input analog signal exceeds a critical amplitude determined by the emitter to base bias level. If the input signal is maintained above the critical level, the circuit will generate additional pulses after a time delay determined by other parameters of the circuit. If the input signal amplitude is increased, the interval between the pulses will be reduced. The result is a pulse train where the distance between the pulses is a function of the input signal amplitude. *This is properly called time delay modulation*, a form of phase modulation which is indistinguishable on an oscilloscope from frequency modulation. However, the difference is critical when the signal is received in the brain. It is not possible to accurately determine the frequency of a pulse train until many pulses have been detected. However, the brain treats the first pulse received as an alarm signal and then measures the time until arrival of the next pulse as an indication of the seriousness of the alarm. The time interval before receipt of the third pulse indicates whether the threat is getting worse or receding.

Because of its importance in some animals and the fact that its impact has been recorded and reported in the literature, a separate Input Transfer impedance has been shown in the emitter lead of the Ganglion Cell. In many situation, it would be desirable for the visual system to stimulate the brain upon the occurrence of a change in illumination even if the steady amplitude of the signal is slightly below the threshold level of the ganglion cell. By shunting a portion of the (low transport velocity) conductor leading to the ganglion cell with a capacitance, it is possible to create a pre-emphasis network. which will present a waveform to the emitter that includes a copy of the initial input waveform added to a first derivative of the input waveform. This has the effect of pre-emphasizing the leading edge of the original waveform and generating a higher than threshold waveform for a short time; causing the ganglion cell to generate a single pulse, even though the initial waveform never exceeded the necessary threshold.

The ganglion cell operates as a switching type oscillator; after the emitter circuit receives a signal that exceeds its threshold, the activa is turned on and the collector voltage goes from a nominal -70 mV. to zero for a period defined above after which it returns to -70 mV. If appropriate, the circuit will repeat this cycle indefinitely as a function of the input signal amplitude. This nominally 70 mV high voltage waveform is impressed on the output conductor of the cell.

13.4.5.2 The input architecture of the ganglion cell

---

[34]Davson, H. (1996) Physiology of the eye. 5th Ed. NY: Pergamon Press

Dacey & Lee have provided detailed maps of the input structure of ganglion cells[35]. They differentiate between parasol, midget, and bistratified types. The bistratified type shows distinctly separate dendritic and poditic input locations described as inner and outer trees.

13.4.5.3 The Node of Ranvier

Because of the desire to transmit the signal produced by the ganglion cell over relatively long distances over the electrolytic conductor at its output, a mechanism is needed to overcome any losses in the amplitude or temporal characteristics of the pulse train. This can be done in at least two ways; connect additional complete neurons (with all of their associated metabolic functions) in series with the ganglion cell signal path or introduce additional functional amplifiers in series with the signal path but make them dependent on the original ganglion cell for their metabolic services. A Node of Ranvier is basically the latter; it is a functionally complete switching amplifier built around an activa but dependent on the ganglion cell for its metabolic function.

All of the circuit conditions are similar to that of the ganglion cell amplifier except for one; in this case, the critical condition is that the load line associated with the output circuit is essentially parallel with the negative slope portion of the "U" shaped portion of the transfer characteristic of the amplifier. Under this condition, the circuit will act as a regenerative amplifier. Whenever an input signal is of greater amplitude than the threshold level of the amplifier, the circuit will generate a single output pulse where the shape of the pulse is determined by the value of C_d and R_p just as in the case of the parent ganglion cell. However, after generating the pulse, the amplifier will not generate a second pulse until after the input pulse amplitude has gone below the threshold level and then increased above it again. Thus, the amplifier will not generate any extraneous pulses. It will only generate pulses that faithfully reflect the time interval between the input pulses. The shape of the pulses will look like the original ganglion cell pulses since they will be reshaped by the time constant of the RC circuit that is very similar to the RC circuit of the original generator.

The number of nodes of Ranvier that can be connected in series inside the cell wall of the parent ganglion cell is not limited by electrical processes; it is most likely limited by the ability of the parent cell to satisfy the metabolic needs of the nodes of Ranvier over an extended distance. As long as the last node of Ranvier is supported metabolically, the last output pulse in the chain will look essentially like the original output of the time delay modulation generator in the ganglion cell in both amplitude and temporal characteristics.

13.4.6 The Photo-piezo transducer

The details of the transduction process have been discussed earlier. In the "straight through" and all other signal paths, the transducer operates the same with one exception; its special mode when supporting the l-channel. The transducer is unpowered and operates like many other crystal transducers/translators (many crystals are used for frequency doubling in laser research and in commercial applications). The transducer consists of a series of individual sacks, disks in Deuterostomia and cylinders in protostomia, each of which is in contact with a dendrite of the associated photoreceptor cell (not necessarily recognizable morphologically in the case of protostomia and difficult to see in the case of Deuterostomia). The main reason for the existence of individual sacks is two fold; to control the change in the dielectric constant encountered by photons when entering the OS (to avoid reflection) and to disperse the charge associated with the π^* electrons (in order to avoid high electrical fields near the dendritic interface) which could inhibit the operation of the overall circuit.

The photo-piezo transducer containing a given chromophore, one of the four rhodonines, will be excited by the absorption of a photon having an energy appropriate to the absorption band of that chromophore. Due to the liquid crystalline structure of the transducer sacks, the absorption coefficient for the appropriate photons is very high, approaching 100%. The excited π^* electrons travel to the contact point with the dendrite of the photoreceptor cell and are de-excited in the process of transferring their energy to the activa of the photoreceptor cell. There is a transport delay between the time of electron excitation at one location and its de-excitation at another that plays a significant role in transduction. This impact is discussed in detail in the Appendix where the Photoexcitation/De-excitation process is described. It defines the shape of the impulse response of the transducer in temporal terms which in turn defines the frequency spectrum of the impulse response. Both of these forms of the impulse response play a major role in the operation of the visual system.

---

[35]Dacey, D. & Lee, B. (1994) The 'blue-on' opponent pathway in primate retina originates from a distinct bistratified ganglion cell type. Nature, vol. 367, pp. 731-735

Because of the minimum energy level required to create a hole-electron pair in the activa of the "super gain" amplifier stage, a slightly different process must be used to sense the photons associated with the L-channel chromophore--a process which amounts to the collection of multiple photons, the summation of the energy from those photons into a quanta of higher energy, and the radiation of a photon related to this higher energy. In the case of the photo-piezo transducer, the same process is followed except the doubled energy packet is transferred to an adjacent activa. **Figure 13.4.6-1 [Figure 13.4.6-1]** provides the theoretical transfer function for both the L-channel and other channels with regard to this process.

One may consider the transfer of energy to the neuron of the photoreceptor as involving the radiation of a photon or a phonon. However, if it is a photon transfer, it is probable that an experiment can be defined that will sense a short wavelength photon being emitted from the transducer upon excitation by red light. If it is a phonon, an additional piezo transducer would have to be placed in intimate contact with the sacks to sense this phenomena.

Figure 13.4.6-1 Theoretical transfer function of the luminance channel EMPTY.

It is important to recognize that in the case of phototransduction by the rhodonine chromophores, there is no need for a source of additional energy to facilitate the process. In fact, for each photon absorbed (pair of photons in the case of red photons), only approximately 2.0 electron-volts of energy are needed to excite the neuron and any excess energy is released as heat in the junction space of the activa. There is a limited capacity of the transducer to absorb photons at a given time which is dependent on its percentage of unexcited n-electrons and hence the percentage of n-electrons which have been excited previously and not yet de-excited through processes at the sack/dendrite junction. This phenomena is usually described in terms of "bleaching". The fact that no additional energy source is needed to support transduction by rhodonine is in stark contrast to the case for rhodopsin where an additional energy source is needed to support the putative isomerization of the chromophore.

13.4.7 Overall signal performance of the "straight through" path

Based on the above discussion of the circuits and elements of **Figure 13.4.0-1,** it is now appropriate to discuss the performance characteristics that can be conveniently measure in the laboratory at a number of points in the circuitry of the "straight through" signal path.

13.4.7.1 The transducer (OS) characteristics

Although probably not easily measured by itself, the overall transfer characteristic of the transducer used in the UV-, S- and M-channels of the vision process are linear over a wide range (estimated at six orders of magnitude or more), limited only by the onset of saturation in the number of n-electrons that have been excited into the π^* state. The exact characteristic, the Photoexcitation/De-excitation equation, can be found in the Appendix. The quantum efficiency of the photoexcitation process, based on similar metallic semiconductor processes and the control of the reflection coefficient at the front of the sacks, probably exceeds 90% and may approach 100% for the illumination intercepted by a specific chromophore. On an area basis, the quantum efficiency of a given trichromatic retina may be only 30%, or slightly less due to the packing factor. The absorption of photons and subsequent current release by the activa of the dendrites into the inter photoreceptor matrix (IPM) is known to be quite linear with respect to distance along the OS of toad. There appears no reason for the situation to be significantly different in other animals, particularly Deuterostomia where other processes like polarization detection are not involved. Although not completely characterized, the total current released into the IPM, again for the three shorter wavelength absorption channels, should be quite linear with illumination level.

In the case of the L-channel, the current discharged into the IPM should closely approximate the square root of the incident photon flux in that absorption band. Instrumentation similar to that used by Baylor et. al. should be able to isolate a true L-channel OS and confirm this characteristic relatively easily. It should be noted that Baylor indicated they used a 'red' rod in their work with the toad and it had a peak spectral response at about 498 nm. This spectral peak is clearly not related to a 'red' rod; however, it should be noted that Baylor was meticulous in placing the single quotation marks around the word red. Baylor used transverse illumination (properly polarized) in their experiments which probably caused them to report the intrinsic absorption spectra of the chromophore which peaks in the 498 nm. region. If they had used axial illumination, they probably could have measured the enhanced absorption characteristic associated with the liquid crystalline character of the disks and obtained the actual absorption spectra associated with that photoreceptor when present in the *in-vivo* eye. Whether it would have been an L-channel or not is open to speculation.

13.4.7.2 The neural characteristics of the photoreceptor cell

The conventional method of measuring the transfer characteristic of the photoreceptor cell is to measure the voltage in the axoplasma of the axon of the cell while illuminating the transducer in the OS. Clearly, this method measures the transfer characteristic of the transducer and the photoreceptor neuron in series. However, with the transducer well characterized, this overall characteristic can be used to obtain the transfer characteristic of the neuron alone. To quantitatively evaluate this neuron, it is important to understand the variability in gain of the "super gain" activa used in the first stage of the differential amplifier. With an understanding of this amplifier, it is possible to design an experiment that will measure this current gain as a function of illumination level under both impulse and step illumination conditions. It is important to account for the transport delay in this circuit when separating the characteristics of the transducer from the combined transducer and neuron characteristics.

Figure 13.4.7-1 [Figure 13.4.7-1] provides a calculated plot of these characteristics. As indicated earlier, the performance of this circuit may depend on the capacitance shunting the Outer Membrane impedance associated with the dendritic wall. This may cause the impulse and step responses to be a function of the previous illumination level. The total delay may also vary with the position of the probe in the axon. The total measured delay consists of a variable part due to the P/D process and a fixed part due to the transport delay in the dendroplasma and the axoplasma of the cell. Note that the waveform generated by the P/D process, which is a function of the illumination level and the temperature determines the passband required in subsequent amplifier stages, the rise time of this waveform determines the minimum upper frequency passband needed in later circuitry and the decay characteristic determines the lowest frequency needed to reproduce the waveform properly (without excessive overshoot/undershoot), particularly on the trailing edge of a step response (For the actual time constants involved in the decay characteristic, see the derivation of the P/D Equation in the Appendix.

[[walk through fig 13.4.7-1 by frame, referencing Baylor '79(b), fig. 1]]

Figure 13.4.7-3 [Figure 13.4.7-2] presents a calculated transfer characteristic to help guide future experimentation. The cell output current is limited to the nominal 20 pA. by the dendrite supply to the differential circuit. The maximum gain of the "super gain" activa within the differential circuit is limited by the collector to emitter voltage across the activa; and this voltage is indirectly a function of the total load impedance in the collector circuit. At zero prior illumination level, a small pulse of illumination applied to the transducer will result in maximum amplification of the number of charges created in the junction space of the "super gain" activa. At higher prior illumination levels, the gain of the activa will be reduced; it will require more illumination in the incident pulse to create more charges in the junction space to result in the same output current level. The result is a current output as a function of incident illumination in accordance with Weber's Law. The result is also a

Figure 13.4.7-1 Calculated transfer characteristics of the photoreceptor cell EMPTY.

Figure 13.4.7-2 The calculated transfer characteristics of the photoreceptor cell EMPTY.

nearly fixed output current amplitude for the same ratio of pulse height to prior illumination level regardless of the input illumination level. This transfer characteristic is the primary process involved in adaptation in the animal eye--and explains why the human eye is completely incapable of acting as a photometer; the photoreceptor neuron is designed to deliver a constant output signal to the visual signal pathway regardless of incident illumination level.

Figure 13.4.7-3 [Figure 13.4.7-3] from Baylor et. al. shows how effective this change in gain, in order to achieve a constant output amplitude, actually is for the toad. Three facts should be noted; the set of waveforms exhibit essentially zero droop out to 100 seconds or more (no capacitance across the "super gain" activa OMI), the on transients and off transients are in line with those predicted by the P/D equation, saturation at the highest flux level removes initial overshoot and noise from the waveform, and the gain drops precipitously with flux level. The circuit gain is difficult to approximate at the lowest flux level and is meaningless at the highest flux; the approximate gain values are:

photon flux photons/sec-μ^2	measured current pA., average	relative gain as a ratio	relative gain normalized to 12 pA value
0.0031	1.0	300	750
0.068	3.0	44	110
1.5	7.5	5	12.5
30	12	0.4	1.0
760	13	>0.017	> 0.042

The change in relative gain over this photon flux level range, $2*10^5$, is in the range of 750:1 to as high as 18,750:1 and is in line with those expected from a "super gain" activa.

Note in **Figure 13.4.7-4 [Figure 13.4.7-2]** that the output current delivered to the axoplasma is linearly related to the input impulse height under fixed conditions of prior illumination and it is in the range of 0 to a nominal 20 pA. peak. However, the voltage measured from the axoplasma to ground is not linearly related to this current. The voltage is the product of the current passing from the collector of the output activa of the differential pair through the axonal load impedance. This impedance includes the perfect diode associated with the power source and the perfect diode associated with the emitter input at the gap junction. The result of these two diodes being in parallel for impedance calculation purposes is that the load seen by the current generated at the collector is a perfect diode, of a size probably dominated by the size of the gap. junction emitter characteristic. Therefore, the voltage is given by the product of the current and the voltage across this diode at the prescribed current. This voltage is given by the logarithm of the output current, in the range of 0 to 20 pA. with the cutoff voltage of a nominal -90 mV. corresponding to 0 pA and the quiescent voltage of a nominal -70 mV. corresponding to a current of 20 pA. This characteristic accounts for the considerable compression as a function of illumination seen in recording of the output pulse shape of the photoreceptor cell as a function of illumination intensity. It also accounts for the "hard" limiting seen in such recording due to the fact the current in the output activa can not go below zero and the maximum voltage at the collector can not exceed the supply voltage of a nominal -90 mV. relative to local ground.

13.4.7.3 The intermediate neurons of the retina

With the output current of the photoreceptor neuron always in the range of 0 to a nominal 20 pA., and the gap junctions and bipolar cells acting as nearly perfect unity gain current amplifiers, the same range of current is delivered to the input structure of the ganglion cell. Assuming these intermediate amplifiers have sufficient bandwidth, up to about 1000 hertz in the case of warm blooded animals, they will have negligible effect on the shape of the signal waveforms. Thus they play a negligible role in the "straight through" signal path. The DC voltage measured at the collector of these stages may vary slightly depending on the axon power source and the signal voltage amplitude may vary slightly due to the impedance of the load circuit.

13.4.7.4 The transfer characteristics of the Ganglion Cell

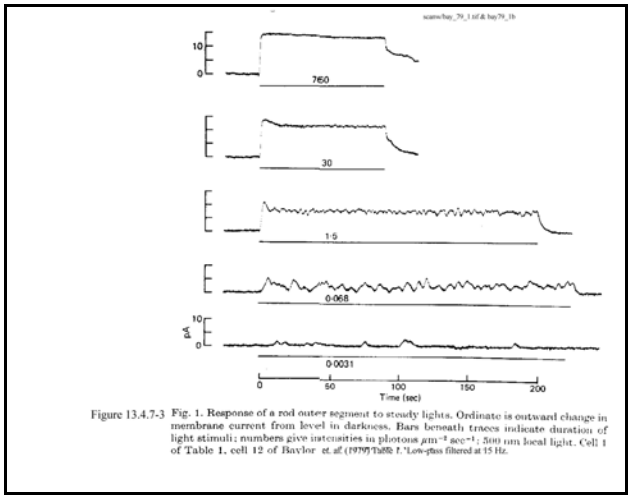

Figure 13.4.7-3 From Baylor, et. Al. ( ) **EDIT**

With the characteristics of the signal delivered to the Input Transfer Impedance of the Ganglion Cell, it is possible to describe the operation of that cell in detail. The cell operates as a time delay modulated pulse oscillator as discussed above and described in detail in Appendix B. The operation of this circuit is dependent on the current delivered to the emitter circuit through the source impedance. For purposes of discussion, it is easiest to think of the signal at the collector of the gap junction as a voltage and the input transfer impedance as a resistor and capacitor in parallel. For most animals, the capacitor can be omitted; however, its impact has shown up clearly in some of the recordings in the literature and it is needed to properly explain this data.

Figure 13.4.7-4 illustrates the steady state transfer function of this cell. The figure displays the interpulse time delay versus the input current (or voltage) ???. Unfortunately, it is very easy to plot the function displaying the reciprocal of the time delay. This second function can be described as the instantaneous output frequency as a function of input current. However, as discussed above and in Appendix B, this leads to a loss of understanding of how the circuit works. It is important to recognize that the circuit will generate a single pulse at any time the input current exceeds a threshold value. This pulse would correspond to a frequency of zero cycles per time period, whatever the time period is. It is only after the second pulse that an instantaneous frequency can be calculated.

If the input impedance is shunted by a capacitor, the current applied to the emitter circuit will consist of the current passing through the resistive component of the input impedance as well as a current described by the derivative of this current. The sum of these two currents has a sharper leading edge than the current following the resistive path alone. The result is that the signal exceeds the threshold value sooner and generates a pulse. In some cases, this pre-emphasis circuit may cause a number of closely spaced pulses to be generated before the circuit settles down to a series of equally spaced pulses indicative of a constant amplitude step input condition.

Figure 13.4.7-4 Steady state transfer function of a XXX ganglion cell EMPTY.

13.4.7.5 The overall transfer characteristic of the “straight through” signal path

Figure 13.4.7-5 [Figure 13.4.0-1] and the above description provides all of the information to define the overall transfer characteristic of the “straight through” signal path. For low amplitude pulses or step changes in illumination sufficiently large as to meet the threshold of the pulse generator in the ganglion cell; the circuit will respond by absorbing the radiation falling in the absorption spectrum of the chromophore present, translating the photon flux into a greatly amplified electron flux, and transferring that electron flux (current) to the input of the ganglion cell. The ganglion cell will generate (as a minimum) a single pulse indicating that the input illumination has been of sufficient amplitude to exceed its threshold. This pulse signal (action potential) will be passed to the brain via one or more additional neurons or Nodes of Ranvier. If the original pulse of illumination was more than sufficient to excite the oscillator in the ganglion cell, multiple pulses will be generated with the interpulse spacing varying as a function of the amplitude of the illumination pulse above the threshold. When the pulse descends below the threshold, the action potential pulse train will stop. For a step illumination input, the process is the same except the pulse train will continue to generate equally spaced pulses indicative of the amplitude of the illumination until the illumination is terminated. And as noted, the initial interpulse spacing may be reduced for a short time if the oscillator input circuit includes a pre-emphasis network.

13.4.7.5.1 Photometric fidelity

As discussed above, the "straight through", and in fact all signal paths in animal vision are not designed for photometric purposes. A very efficient adaptation circuit is provided by the "super gain" activa at the input to the electronic portion of the circuit. This circuit tends to limit the maximum amplitude of the current passed through the overall circuit to a nominal value for that animal species and/or for that channel within a given species. Baylor et. al.[36] indicate a rather wide range, 7 pA. to 22 pA., for this nominal value within a group of 18 cells of the toad.

The transducer circuit feeding the electronic circuit is a completely passive circuit of a liquid crystalline nature. It derives all of its input energy from the photons it absorbs and passes this energy on to the electronic circuit with excellent efficiency except when it is overdriven. When exposed to a very high photon flux rate, its rate of electron transfer becomes independent of the incident photon flux rate. Under this condition, the transducer is said to have become bleached.

Figure 13.4.7-5 Overall transfer function of the straight through signal path EMPTY.

Although the portion of the electronic circuit from the second activa in the photoreceptor cell to the input to the first activa in the ganglion cell operates in a highly linear mode, this is of trivial importance because of the adaptation process in the first, "super gain", activa. The fact that the L-channel chromophore operates under square law conditions while the other channel chromophores operate under linear conditions is also irrelevant because of the action of the "super gain" activa as will be seen below.

13.4.7.5.2 Signal phase

The portion of the overall circuit from the second activa to the input to the ganglion cell operates in a monophasic mode without signal inversion. Thus, the same signal form will be measured at any point in the circuit between these two end points.

13.4.7.5.3 Passband

This direct coupled circuit forward of the ganglion cell operates without any significant limitation on the frequency passband of the incident signal. As shown in the development of the P/D equation in Appendix A, the waveform generated by the transduction process in the chromophore is bandwidth limited by the parameters of that process, in terms of both initial rise time and decay time. The delay is related to transport phenomena and decay rates and does not involve *any* physical filter stages. The following circuit does not involve *any* multipole filter as is so often assumed in the literature. The slight overshoot in the signal measured at the OS after a step illumination input is a characteristic of the P/D process and does not relate to any "peaking filter", see Appendix A.

13.4.7.5.4 Noise performance

The noise performance of the "straight through" path is worthy of detailed discussion. It exhibits several unique features. Because of this, the question as to whether the visual system of an animal can provide noise limited performance needs careful interpretation. This question actually involves two questions; can the visual system provide noise limited performance in general, and if so, does the noise limited performance extend down to very low photon flux levels.

It is relatively easy to answer the first question. If one looks at the electrophysiological recordings of the output of

[36]Baylor, D. Lamb, T. & Yau, K-W. (1979a) ibid. pg.594.

the photoreceptor cells as a function of illumination, it is easily seen that the ratio of the noise amplitude to the illumination amplitude decreases in proportion to the square root of the illumination. This is a clear indication that the system is operating in a photon noise limited regime at this location in the system. Baylor, Lamb, & Yau have shown that individual photons can be sensed at this point in the signal path; indicating the signal is photon noise limited at this point.

If the interpulse interval measured at the output of a "straight through" ganglion cell is measured and it shows a random noise component that also decreases with the square root of the input illumination, it can be surmised that the system is operating at noise limited performance at this point also. When the illumination is reduced to the point where the random noise component of the interpulse interval is no longer decreasing in accordance with the square root relationship, the system is no longer photon noise limited; it is then limited by either internal noise sources or by the test instrumentation. If the illumination level falls below the threshold level of the ganglion cell, no output pulse will be generated and the noise performance of the system relative to the input signal becomes undefined. The system is clearly not photon noise limited under this condition.

As discussed earlier, since the base lead of the "super gain" activa is open, this activa is not biased into the Class A or Class B amplifier operating regime. It requires at least a 2.0 eV signal to cause an output. This prevents thermal noise generated within the amplifier from affecting the output. There are additional possible noise sources in the transducer related to the vibrational states and the molecular states of the chromophores. However, it is clear from the work of Baylor, et. al. that a signal can be recorded at the OS that appears to record single photons being detected by the Photoreceptor cell. If single photons are detected, it is a clear indication that the noise related to the internal molecular structure of the transducer is negligible compared to the Poisson noise associated with the random input of photons. Therefore, it can be said that all visual pathways using the photoreceptor configuration of the "straight through" path (that is, all known pathways) provide photon noise limited detection capability. With the high gain of the "super gain" activa, it is virtually assured that the signal is photon noise limited at all points up to the threshold circuit of the ganglion cell. If the threshold level of the ganglion cell is set very close to the quiescent output level of the distal circuits to which it is associated, the output of the ganglion cell would track closely the noise performance of that visual channel. However, if the threshold is considerably higher than the quiescent signal level, the output signal would only reflect the noise performance of that channel for illumination levels above the threshold; no output pulse would be generated for any illumination level below the threshold. In the absence of a pulse generated by the ganglion cell, the brain does not receive any signal related to the detection of a single photon or of a very low photon flux. Under this condition, although the early stages of the visual process are capable of detecting a single photon, the animal is not capable of perceiving a single photon. A similar statement applies to very low photon flux rates.

Data does not appear to be available for a wide variety of animals; however, the data of Fuortes & Hodgkin[37] shows that for the dark adapted eye of *Limulus* at about 9 degrees Celsius, the threshold of sensitivity determined by the ganglion cell is about 1.3 times 10^6 photons/second of white light, an input signal to RMS noise level of about 60 Db. This corresponded to a voltage threshold of about 6 mV. out of a total nonlinear range exceeding 30 mV. Below this input level of 1.3 times 10^6 photons/second, this signal channel in *Limulus* was blind. This photon flux is far greater than the few photons/second level sensed at the OS by the toad in Baylor, et. al. Unfortunately, the ganglion cell threshold for this toad was not reported so the minimum perceivable signal level cannot be determined. More test data needs to be acquired to establish the actual threshold in other, and specifically higher order warm blooded, animals before the question of photon noise limited performance at low flux levels can be answered..

It should be noted that the "straight through" path circuit diagram provides detailed information about the noise performance of the visual system that has not been available before. This information undermines very seriously the material presented by Laughlin[38] which discusses Transducer noise and Receptor noise from a statistical level which appears to be based on linear signal processing. He does not recognize the thresholding based on energy involved in the "super gain" activa of the photoreceptor, the thresholding based on current (charge) level associated with the pulse oscillator in the ganglion cells, or the nature of the initial transduction process, especially with regard to the L-channel. He presents no model for the process he is discussing and concludes with the thought that the subject has not been explored adequately but he must terminate the discussion and move on (pg. 221).

As an informal reality check, it is worth examining the reader's visual system. A conventional television receiver

---

[37]Fuortes, M. & Hodgkin, A. (1964) Changes in time scale and sensitivity in the ommatidia of Limulus. J. Physiol. vol. 172, Fig. 5 (left)

[38]Laughlin, S. (1981) in Handbook of Physiology, edited by H. Autrum. NY: Springer-Verlag pp. 209-221

tuned to an unoccupied channel exhibits an image that is basically noise limited. Each pixel changes amplitude in a random manner. If the photoreceptors of the eye in the fovea were of the straight through type and the threshold of the ganglion cells was set low enough to allow noise limited performance at low light levels, one would expect to see, at very low light levels, a small image in the center of your field of view that looked like the television display, individual pixels changing rapidly in signal amplitude. Do you see such an image? Or do you just see an essentially uniform black area at very low illumination levels? Because of the convergence of multiple photoreceptors prior to thresholding, the author perceives a black level under the above conditions with a noise component that is clearly integrated over a much larger field than a single pixel.

Using the language of the television engineer, the human visual system typically operates at a signal to noise ratio of over 40 Db, i. e. the root-mean-square (RMS) noise level is at or below 1.0% of the mean signal level. It appears that the ganglion cell threshold is set to maintain approximately this minimal level of performance in the fovea. It appears that the brain examines input signals from ganglion cells representing different levels of convergence before interpreting the input imagery. To explore this subject further requires a great deal more information concerning the pattern and level of convergence of many photoreceptors prior to thresholding by a single ganglion cell. For additional general, and relatively elementary compared to the model used here, background material; see Rose[39].

13.4.7.5.5 Energy efficiency

The overall energy efficiency of the “straight through” visual pathway is remarkable. When the input illumination is very low, the “super gain” amplifier does provide 10,000 or more electrons for every photon absorbed. However, since the input photon rate is extremely small under this condition, the total number of electrons drawn from the power supply per second is actually very small, approximately 1 pA. As the light level increases, the number of electrons drawn from the power supply of the “super gain” activa never exceeds a nominal 20 pA. Since this activa is part of a differential amplifier, the actual current drawn from the power supply is a nominal 20 pA. at all times regardless of illumination level. This same 20 pA. current is passed along the signal path without requiring significant additional power input until it reaches the pulse generator in the ganglion cell. The ganglion cell does require additional power to operate. However, the Nodes of Ranvier only draw power from their sources during the actual pulse interval, and are therefore quite economical in power.

13.4.8 Test data to be expected from the “straight through” path

It is important to note that the circuit of the “straight through” path, as well as other paths in vision, are all current driven. Current and charge are the primary variables. Voltage is a secondary variable that is related to the current and charge at a node by a diode relationship. An investigator can not assume that a voltage he/she measures is linearly related to the current in a circuit element or the charge at a node. Although it is generally easier to measure a voltage, care must be exercised in interpreting this measurement. Baylor et. al.[40] performed a very valuable series of experiments by essentially isolating the OS of a photoreceptor from its local ground connection and collecting all of the current passing through the outer membrane wall of the combined PC dendrites. This gave data that required little manipulation. Unfortunately, it is not a direct measurement of the output of the photoreceptor cell. The output current of the PC cell is actually the nominal maximum output current minus the current measured at the OS, a feature of a differential amplifier.

Because of the presence of the “super gain” activa immediately after the transducer, the signal amplitude at later points in the circuit bears no fixed relationship to the input illumination, either in terms of current or voltage. The gain of this amplifier changes drastically in order to keep the signal at later points in the circuit within the nominal 0-20 pA. range. Under dark adapted conditions, the gain of this amplifier will be at maximum and relatively constant; making it practical to take reproducible threshold illumination measurements. Note that where psychophysical (behavioral response) testing is used, such measurements are not photon noise limited measurements but ganglion cell threshold limited measurements. Only electrophysiological testing with probes forward of the ganglion cell input impedance can provide information about photon noise limited threshold sensitivity.

One should note the similarity between the bipolar cell circuit and the pulse generator circuit of the ganglion cell in **Figure 13.4.0-1**. Note how the addition of a small capacitance to this electrotonic bipolar circuit can turn it into an

---

[39]Rose, A. in Barlow, H. & Fatt, P. (1977) Vertebrate Photoreceptors NY: Academic Press pp. 1-13
[40]Baylor, D. Lamb, T. & Yau, K-W. (1979a & 1979b) ibid

analog voltage controlled pulse generator just like that of the ganglion cell. This is one explanation why many experimenters have reported the intermittent generation of action potentials at points in the retina associated with the bipolar cells and/or lateral cells (horizontal and amercine types for instance) and even photoreceptor cells[41]. Since all of these activa appear to have a finite resistive impedance in their *common* base lead, the addition of a capacitance to either the emitter or collector lead can cause oscillation. At the impedances found in the eye, it is quite possible that the investigators probe can provide sufficient capacitance (as well as a low enough shunt resistance) to the biological circuit to cause it to become unstable and oscillate.

> The vision literature does not seem to recognize the concept of intrinsic (or internal) feedback. It generally discusses feedback in terms of an extrinsic (external) loop around an amplifier. Any amplifier with a finite impedance in a lead shared by the input and output circuits will exhibit internal positive feedback. This internal feedback can be suppressed or exploited through the choice of appropriate circuit elements.

Although the "straight through" circuit representative of animal vision exhibits positive feedback in the pulse generator of the ganglion cell and negative feedback in the "super gain" activa of the photoreceptor cell, it is internal in both cases. There are no external feedback loops associated with this circuit type.

Whereas the signal path represented by the "straight through" circuit of **Figure 13.4.0-1** is firmly established, the arrangement of the power sources is arbitrary. This is because it is possible to provide power to a direct coupled string of amplifiers using two different concepts;

+ all power provided by one voltage source attached to the last amplifier in the string and a series of bias voltages placed along the string to insure proper amplifier operation.

+ power provided to each amplifier stage in an amplifier string by a separate voltage source and a series of bias voltages placed along the string to insure proper amplifier operation.

The first approach is most economical of power sources however, it is difficult to insure all amplifier stages are biased properly since small changes due to aging or pharmacological changes can affect performance. The second approach provides greater design and operational flexibility. Detailed laboratory measurements are needed to determine which of these approaches is used in animal vision. The measurements must determine the maximum supply voltage (equal to the collector cutoff voltage) and the value of any bias supplies (also under cutoff conditions) at each stage with a desired accuracy of about 1 mV. and 1 degree centigrade.

Detailed laboratory measurements are needed to determine whether the capacitance used to shape the pulse output of the pulse generator circuit in the ganglion cell is connected to the emitter lead or to the collector lead. Similar investigations are needed to determine the location of the capacitance with respect to each Node of Ranvier.

13.5 The first "Lateral" signal paths

[MUST REWRITE THIS MATERIAL TO SUPPORT A FIRST AND SECOND LATERAL PATHS (in 13.6). xxx]

We now have available the complete P/D equation, an understanding of the neuron as a biological activa and the knowledge of the significant differences between the occasionally observable information carrying ***currents*** in the "straight through" signal path and the observable ***voltage*** waveforms associated with these currents. This provides a foundation for defining the lateral signal path.

The "Lateral signal path is the prototype for two paths; the chromatic path and the geometric path. It is not clear from the literature whether these two independent paths exist in the idealized form to be developed here; it is more likely that they are also participating in signal convergence as well, where the input to the lateral cells may consist of signals emanating from tens to hundreds of individual distal cells. **Figure 13.5.1-1 [Figure 13.5.0-1(a)]** presents the idealized lateral signal path employing signal processing located at the proximal edge of the Inner Nuclear Layer (INL). For economy of space, the Gap Junctions have been shown in abbreviated form that stresses their active nature but omits the power and bias circuits related to them. All Gap Junctions have essentially the same purpose and capability. They provide a nearly perfect one way current path between the more prominent cell structures

---

[41] Jarvilehto, M. in Handbook of Sensory Physiology. edited by H. Autrum, vol VII/6A NY: Springer-Verlag pg. 332

based on transistor action. Although it is similar to **Figure 13.4.0-1** in many ways, **Figure 13.5.0-1(a)** illustrates a number of features not found in the "straight through" signal path.

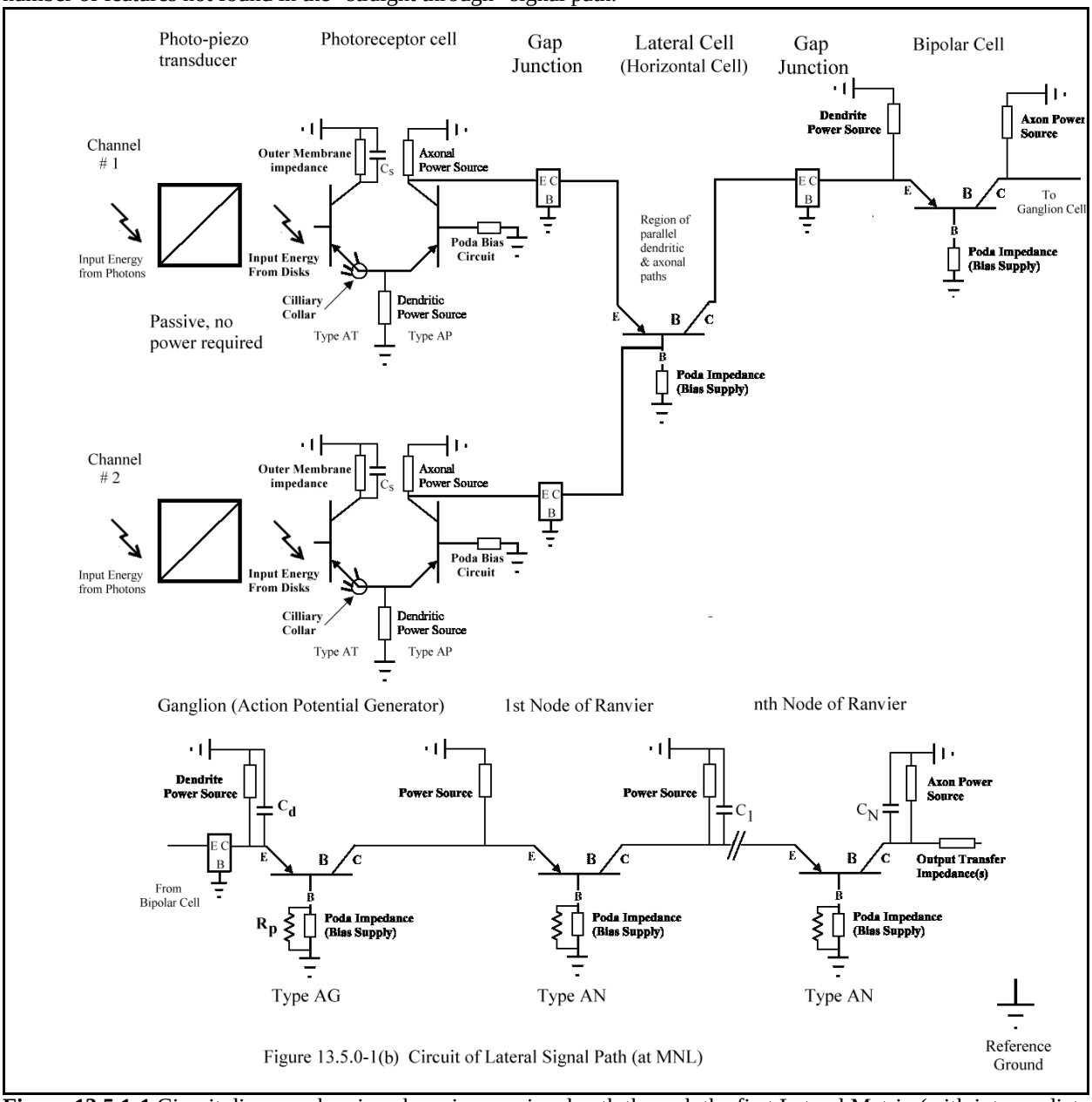

Figure 13.5.0-1(b) Circuit of Lateral Signal Path (at MNL)

Figure 13.5.1-1 Circuit diagram showing chrominance signal path through the first Lateral Matrix (with intermediate bipolar cell).

+ the figure consists of two separate analog chromophoric signal channels but only one pulse output channel.

+ the monophasic signals from two chromophoric channels are combined to provide a composite, biphasic, signal.

+ the composite signal is produced by a lateral cell located along the proximal edge of the Inner Nuclear Layer, the location generally associated with Amercine cells.

+ the electrical performance of the lateral cell is fundamentally different than that of cells examined previously; the

activa is intended to provide current gain and a related increase in voltage--with a resultant phase inversion of one signal.

+ a major location where truly biphasic signals are found to originate in the retina, here at the interface of the INL and the Inner Plexiform Layer.

+ from the morphological perspective, one of the dendritic inputs and the axonal output of the lateral cells are located adjacent to each other for a significant distance and may be encased in a single outer cell membrane as discussed in Section 10.2 and leading to the name Amercine, without (separate) axon structure.

+ the bias supply of the action potential generator in the ganglion cell is now biased so as to oscillate continuously with a nominal pulse spacing in the absence of an input signal.

In **Figure 13.5.1-2 [Figure 13.5.0.1(a)**], the signal path related to Channel #1 is unchanged from the "straight through" path, the signal is recognizable at every point as of the same phase. On the other hand, the Channel #2 signal remains the same until it reaches the Lateral Cell where it is amplified and inverted. From there on, it is recognized by these characteristics, it is now "depolarizing" and several times larger than its Channel #1 counterpart.

> Note that a probe contacting the output of a lateral cell while stimulation is applied only to Channel #2 will result in the conclusion that, in the animal under observation, illumination results in a depolarizing signal (possibly related to the photoreceptor if the probe location is not determined carefully). In fact, the photoreceptor output is still hyperpolarizing; the actual observed signal is due to differencing between two hyperpolarizing signals, and it does not involve feedback .

Figure 13.5.1-2 [Figure 13.5.0-1(b)] presents a second idealized lateral signal path employing signal processing located near the distal edge of the Inner Nuclear Layer (INL). More specifically, it may be associated with the line labeled "cone pedicels and rod spherules" in Boycott & Dowling[42] and defined here as a new layer, the Middle Nuclear Layer (MNL).

> It should be noted that the INL, MNL and the Outer Nuclear Layer (ONL) are strictly morphological designations, generally related to the bulky portions of cells, the somas. The primary factor controlling the location of the soma is topological, not functional; where is there space available to accommodate this structure fundamentally related to organic housekeeping. The actual areas of interest for the experimenters are at the location of the axons. An additional area of interest to the theoretician is the location of the actual activa based amplifiers in the cell; generally speaking, these activa are not related to or located in the soma.

The functionality of this second idealized lateral signal path focused on the MNL is very similar to the previous one focused on the INL location. The primary difference is that the lateral cell of interest, normally defined as a horizontal cell, is located closer to the photoreceptor cells and its biphasic output may be passed to a specially biased Bipolar Cell; one which must respond to biphasic inputs with either a biphasic output or a rectified output related to the biphasic input.

An alternate approach is shown in **Figure 13.5.1-2 [Figure 13.5.0-1(c)].** In this case, the axon of the Horizontal Cell extends to the ganglion cell layer and interacts directly with a Ganglion Cell. This second approach removes the requirement to define a modified form of Bipolar Cell (biased differently) that can faithfully transmit a biphasic signal. Recall that these idealized paths may actually exist while buried in a more complex overall architecture. This will make it very difficult to define an actual individual physical signal path except through very careful histology based on the putative paths and circuit elements (amplifiers particularly) presented in this Chapter.

---

[42]Boycott & Dowling (1969) reprinted in Rodieck fig 1-3

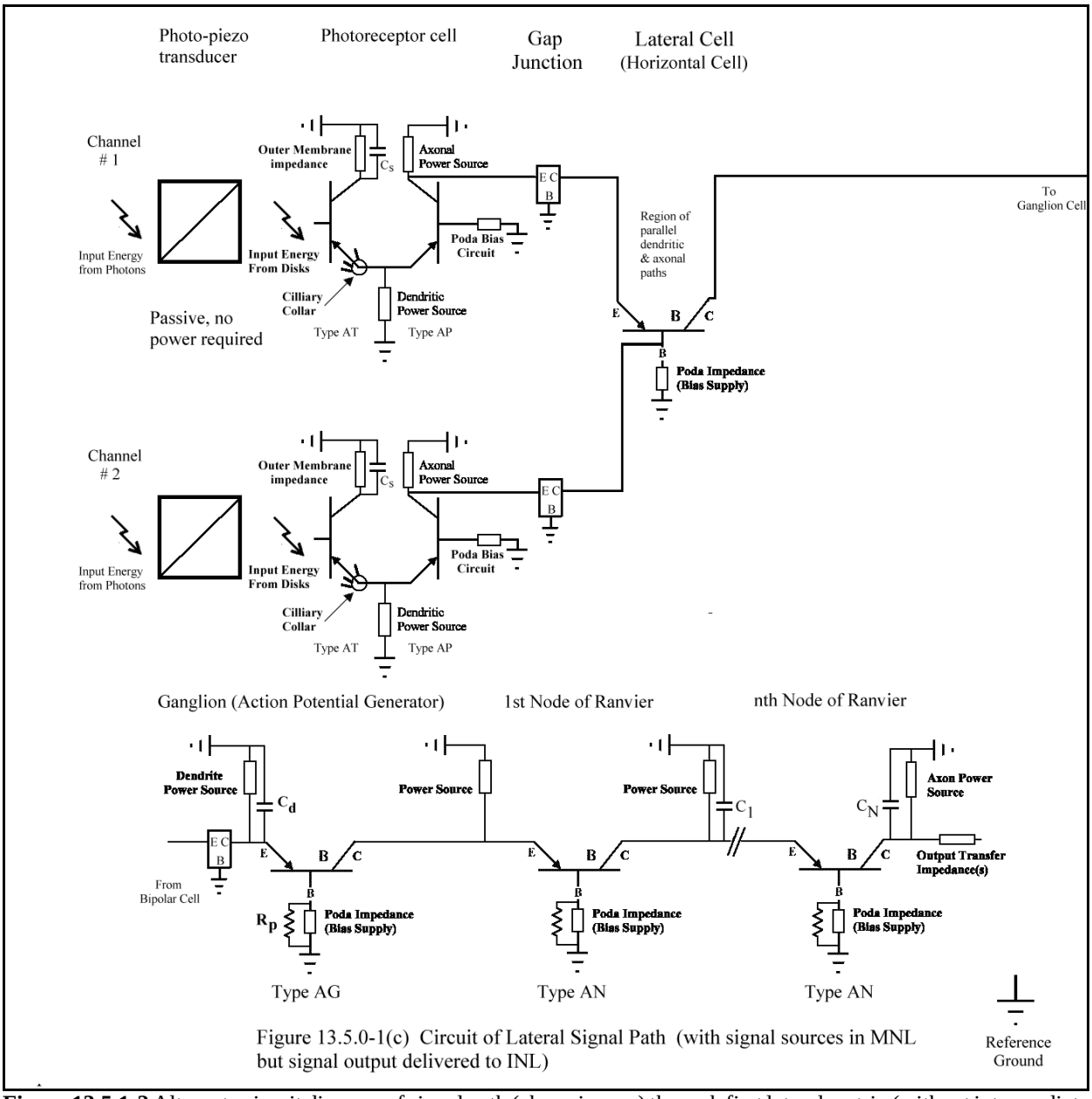

Figure 13.5.1-2 Alternate circuit diagram of signal path (chrominance) through first lateral matrix (without intermediate bipolar cell).

As will be developed more fully in the following section on the ERG; Brown, Watanabe & Murakami found that the b-wave, which they found to be a positive going inverted version of the a-wave is first seen in the INL. No reference has been found in the literature to a positive going waveform existing in the vicinity of the MNL. This would indicate that the Horizontal Cells related to the Lateral Signal Path have their axons contacting Ganglion Cells directly in the INL. Subject to closer study in the future, it appears that there is no need for a biphasic capable version of the Bipolar Cell as called for in **Figure 13.5.0-1(b).**

There is material in the literature that indicates there are two separate types of bipolar cell that are in turn connected to two separate types of ganglion cells, see Section 11.6. The material would suggest that the chromatic channel of this model utilizes a biphasic bipolar cell, called a midget bipolar that is connected to a midget ganglion cell that is continuously oscillating. Figure XXX illustrates two possible circuit configurations in this area. This area is worthy

of more specific laboratory investigation.

A number of authors have provided a cartoon attempting to explain the interconnection of the lateral cells located at both the MNL and the INL. However, this is a specific case where a cartoon is inadequate. As an example, Dowling & Werblin have presented a cartoon where the photoreceptor, the horizontal cell and the bipolar cell are interconnected at a (possibly complex) node whereas Ottoson provides a cartoon that indicates the horizontal and amercine cells interact with the bipolar cells only, the horizontal cell is in contact with the dendrite of two separate bipolar cells and the amercine cell is in contact with the axon of two separate bipolar cells.

Tomita and Svaetichin performed most of the defining work regarding *mixed spectral signals* generated by these two lateral cell architectures in the 1950-60's. Tomita provides a good overview of the work of these separate teams in his 1965 paper[43]. Specifically, they labeled multi phasic signals found in the region between the photoreceptor cells and the ganglion cells, now further restricted to the region between the MNL and the INL, as S-potentials. They provided both detailed records of the waveforms found and statistical estimates of the number of each type found. This data will be discussed more fully below.

Figure 13.5.1-3 Schematic of the first lateral signal path EMPTY.

Many other workers have performed defining work regarding spatially dependent signals generated by these two lateral cell architectures. In this context, the lateral cells are the source of the quasi-functional "on" and "off" designations used so often in psychophysical (behavioral) studies.

> It is important to re-iterate that in behavioral testing, there is usually a background illumination involved and the expressions "on" and "off" are used to define the overlaid test signal. The expressions do not reflect any change in the background situation. Thus, in a literal sense, an "off" signal is actually a reduction in the net input signal.

A third field of investigation that is dependent on the operation of the lateral cells is that of the temporal, including frequency) response of the overall visual channel. This field has not been explored in as great depth at have the previous two.

13.5.1 The Chromatic signal path

It is critical at this point to recognize that the "straight through" signal path is a linear path with respect to charge and currents (but not voltage), between the output of the PC neuron and the input to the ganglion cell. The chromatic signal path is inherently different. The chromatic signal path processes voltages obtained from the nodes of the "straight through" path which are essentially logarithmic representations of the related currents until they reach

[43]Tomita, T. (1965) Electrophysiological study of the mechanisms subserving color coding in the fish retina. Cold Spring Harbor, NY: Cold Spring Harbor Laboratory of Quantitative Biology, Vol. 30, pp. 559-566

amplifier saturation level. This fact creates a crucial difference. It allows the circuits to add and subtract logarithms, i. e. perform multiplications on the input signals. This process is inherently non-linear and unexpected results can be expected.

A warning before proceeding, much of the visual spectrographic data taken in past years utilized relatively broad spectral filtering techniques. The results were highly smoothed waveforms which were said to be equivalent to the CIE standard spectrums. More recent spectra clearly show a dip between the spectral peak near 0.537 µm. and the peak near 0.610 µm. This advancement is clearly exhibited in the paper by Kalloniatis & Pianta[44]. The smoothness of the older spectral data in their fig 6 is easily contrasted with the newer data in their figs 1, 2 and even 3.

Figure 13.5.1-5 [Figure 13.5-1] is an expansion of the chromatic signal path taken from the frontpiece. It presents a definitive description of the interplay between the Helmholtz school of trichromatic vision (in humans) and the Hering school of color differences. The purpose of this differencing is to create additional nodal points along the periphery of the spectral space as plotted in the CIE Chromaticity diagram. These nodal points allow the retina to pass more definitive signals to the brain relevant to color rendition under typical conditions. However, these signals are not absolute in accuracy; the variation in sensitivity (state of adaptation) of the OS for each primary signal path causes the chromatic signal path to issue signals which can be easily corrupted under un-natural conditions. Some of these situations will be discussed in Part D below.

13.5.2 The detailed chromatic model

13.5.2.2 The expanded circuit diagram

13.5.2.2.2 The chrominance signal path

The literature provides an ever growing amount of experimental data concerning signals in the chrominance signal path. Unfortunately the data has at least two troubling features.

First, much of the data is based on psychophysical experiments which do not give detailed information about the actual analog signal processing in the retina. There is a more limited amount of data from biophysical experiments that does give the needed information.

Unfortunately, the data from biophysical experiments is generally of a piece-meal type. This may be due to the authors focus or the constant need to minimize the number of illustrations in a technical paper. In any event, an author usually presents a selected set of illustrations which may not completely characterize the signal paths he investigated. As a simple example, if an author proposes that the chrominance signals in a trichromatic eye consist of differencing signals between individual pairs of signal, it is logical to assume that there would be six pairs of such signal to completely describe the differences between three original signals:

Figure 13.5.1-4 Expansion of the chromatic signal path schematic EMPTY.

S-L, L-M, M-S and L-S, S-M, M-L

If the investigator only finds a selected set of these possibilities, it would seem to be his responsibility to explain why and how he confirmed that situation. In text, it is common for investigators to speak of the “red-green” and “blue-yellow” pairs but this is more likely due to the ease of saying these word-pairs in the English language and subsequent reinforcement in the literature than it is to their presence to the exclusion of the “green-red” and “yellow-

[44]Kalloniatis, M. & Pianta, M. (1997) L and M cone input into spectral sensitivity functions: A reanalysis. Vision Res. vol. 37, no. 6, 799-811

blue" pairs. This problem is compounded by the fact that there is no "green" chromophore in the visual spectrum just as there is no "yellow" chromophore. There is what could be called a yellow-green chromophore, rhodonine 7, having a peak sensitivity at 0.532 microns for animals derived from a saltwater environment.

A third complication is that most investigators have assumed that all three chromophoric channels are essentially "linear" in the sense that they all reflect the same type of response to irradiation. Unfortunately this is not true and the L channel performs significantly different than the S and M channels. This causes the L channel to be interpreted awkwardly by some investigators, indicating that it is sometimes difficult to discern in their responses--when in fact it should disappear.

It is a major goal of this chapter to define the correct conceptual block diagram for the chromatic signal processing channel of vision. The most general situation required for this Stage 2B signal processing would involve two substages; the first involving only paired differences between chromophoric signal channels and the second involving a second stage of paired differences involving the signals from the first stage. These second differences could result in a variety of monophasic, biphasic and triphasic spectral responses.

> Using the definition of Tomita, discussed below, the term biphasic defines a spectral responses containing two peaks of opposite polarity. It does not imply or limit the spectral responses to only two chromophoric input signals. Similarly, a triphasic response involves a waveform with two peaks of one polarity separated by a peak of opposite polarity.

As an alternate to the "pairing" of responses, there may also be a need for a three input summing stage which would give a variety of triphasic spectral responses. This merely requires multiple inputs to the summing and/or differencing inputs to the signal processing amplifier.

The alternative employing two pairing processes in sequence would probably, but not necessarily, lead to two separate layers of lateral cells at one location in the retina. No report of this configuration could be located in the literature.

If it is impossible to find spectral responses from the Inner Nuclear Layer(s) that exhibit simple two input differencing, then Stage 2B can be more appropriately represented without introducing two sub-stages. In this case, three input summing and differencing circuits can be used in the first and only substage.

It is very interesting to note the recent work of Dacey and Lee[45] who used light emitting diodes with "dominant wavelengths of about 638, 554 and 470 nm, respectively." while working with Old World monkeys. Although they did not specify whether any filters were used with these diodes to further tailor the irradiance spectra, these wavelengths correspond almost exactly with the peak wavelength of the chromophores, Rhodonine 5 @ 645, Rhodonine 7 @ 545 and Rhodonine 9 @ 445 respectively. In their paper, they speak of red, blue and green. They also speak of red + green opposed by blue and of red + blue opposed by green signals applied to the retinas in their work. They do speak of a blue-yellow test performed by flashing the blue diode out of phase with a combination of the red and green diodes. This particular test should cause the hair to stand up on a older and devoted member of the Hering school since yellow is clearly not a mixture of red and green in that theory. Although the work of Dacey & Lee was biophysical in nature, they focused on the ganglion responses instead of the analog responses of the signal processing neurons. Because of this, it is difficult to determine the absolute polarity of the signals modulating the ganglion cells they examined by reading their paper.

A test configuration less susceptible to spectral cross-talk between the chrominance signal processing channels was used by Krauskopf[46]. It used monochromatic gas lasers at 441.6 nm, 514.5 nm and 632.8 nm. which gave irradiances which were well matched to the peak sensitivity of the three chromophores.

One of the important goals of this section is to indicate whether all of the above six difference pairs are found in a given species or whether a given retina has been simplified through evolution to utilize only a subset of these pairs. Since these pairs occur in complementary sets, the presence of the individual pairs cannot be determined unless the polarity of the signals involved in these pairs is known at a specific point in the chrominance channel. Based on this

---

[45] Dacey, D. & Lee, B. (1994) The 'blue-on' opponent pathway in primate retina originates from a distinct bi-stratified ganglion cell type. Nature, vol. 367, pg. 731-735

[46] Krauskopf, J. Williams, D. & Heeley, D. (1981) Computer controlled color mixer with laser primaries. Vision Res. vol. 21, pp. 951-953

work, this polarity can now be specified.

A goal of lesser importance is to determine whether there are any biological activa circuits used in the visual process that require three dendritic inputs to create a signal such as S-L+M or whether this signal is always created using dual input activas by forming the difference between S-L and L-M in a second stage of differencing, resulting in the signal S-2L+M. It is common in the literature to find both of these expressions, S-L+M and S-2L+M, but seldom in one paper. This section will attempt to summarize the polarity of the signals reported in the literature in order to determine if all six difference pairs are reported.

> It should be noted that the above algebra is very symbolic in nature. The symbols represent analog, not binary, waveforms. Furthermore the relative amplitudes of the different components are unspecified. Thus, without further information, there is no way to differentiate between the expression S-2L+M and just S-L+M. In addition, it is frequently the case that the actual amplitudes of S and L are small compared to the amplitude of M. This frequently leads to investigators omitting a smaller term from the equation because it is hard to recognize it in their data; S - M or S - 2M may be reported instead of S - M + L.

Resolution of the question; "are their three input biological activas in the visual system?" will provide a definitive answer to whether the chrominance signal path should be presented as a two substage path employing only 2 input activas or whether a single stage representation is adequate using three input activas. Initially, a two substage approach will be followed as it appears to be the most likely case from a cursory review of the literature.

As will become clear below, there is a big difference between a dual or triple input biological activa and a biological activa using a "resistive summing circuit" at its input end to combine two or three signals.

Figure 13.5.2-1 [Figure 13.5.2-4] illustrates the block diagram of the Chrominance Signal Processing function, Stage 2B and its relationship to its functional neighbors. Notice that this signal path is actually replicated a number of times in order to generate the signals required by the brain to interpret all aspects of the chrominance information in the original scene, the object plane. These replications will be arbitrarily annotated based on the chromophoric output of the first amplifier of the substage. Hence, the 2B-1(S-M), the 2B-1(M-L), the 2B-1(L-S) and the 2B-1(M-S), the 2B-1(S-L), 2B-1(L-M) substages.

Figure 13.5.2-1 Block diagram of the chrominance signal processing function EMPTY.

Substage 1 of stage 2B

The chromatic block diagram of animals with color discrimination capability calls for up to four 2-input differencing amplifiers (three in trichromatic visual systems such as found in man) in the first substage of stage 2B. Each of these amplifiers can be virtually identical; unless later analysis of the literature requires gain differences in the various circuits. Hence a single differencing circuit design will be postulated for use in this substage as shown earlier in **Figure 13.5.2-2** [**Figure XXX 13.5.2-**???]

The chromatic block diagram also allows for an additional single summing amplifier to create a single panchromatic visual signal path. This circuit is shown in **Figure 13.5.2-2 [Figure 13.5-5**]. It is not clear whether this element belongs in stage 2B or is actually accomplished in the brain. Whereas the overall spectral sensitivity of the eye generated by such an element is reported by the psychophysicists, no experimental data could be found which showed a waveform from the region of stage 2B signal processing that conformed to the overall spectral sensitivity of the eye. Such a summing circuit will be employed here in order to show how the complete spectral response of the eye under both photopic and scotopic conditions is obtained from the same circuitry.

Figure 13.5.2-3 [Figure 13.5.2-5] illustrates one of the replicated copies of the chrominance signal path at the component level. Notice that it is clearly an overlay to the luminance channel, obtaining its input signal from a node of the luminance channel.

If all of the signals emanating from the IS of the photoreceptors are hyperpolarizing in the presence of irradiance, then the non-inverting output of the substage 2B-1 amplifiers will also generate a hyperpolarizing output for the summed input in the presence of irradiance. Conversely, the inverting input will generate a depolarizing output in the presence of irradiance.

Each of the differencing amplifiers is biased into the linear operating range in the absence of any input due to irradiance, by any of several methods. Each of the channels of the summing amplifier is biased to the cut-on point. All of the input signals to these amplifiers are taken at voltage nodes and are hence representations of the natural logarithm of the irradiance waveforms intensity. This causes two situation of interest.

Figure 13.5.2-2 Circuit diagram of a single bipolar circuit EMPTY for creating a panchromatic luminance signal .

Figure 13.5.2-3 Chrominance signal channel circuit diagram EMPTY at the component level.

[discuss difference channel]

In the summing channel, the output of the amplifier is proportional to the sum of the logarithms of the individual channels. For spectrally separate channels, the corresponding output would be essentially the logarithm of the three channels represented individually as shown in **Figure 13.5.2-4 [Figure 13.5-4(a)].** However, if the spectral channels exhibit overlapping sensitivity, a different result is obtained depending on the relative amount of overlap as shown in **Figure 13.5.2-4 [Figure 13.5-4(b)].** If the channels overlap considerably, a new peak can occur in the combined sensitivity waveform which does not exist in the individual spectral sensitivities. This effect will be developed further in the next section. It provides a very significant element of this theory which unifies much of the psychophysical test data in the literature and shows how the data follows directly from the P/D equation of vision.

13.5.3 The complete chromatic response

[work in here the opening quote from Green 1969 “There is a body of literature suggesting that temporal factors are of importance in the processing of color information by the visual system.” and “there is evidence that the temporal integrating properties of the three cone systems of trichromatic color vision are different.” Indicate how this leads into many illusions and ephemeral visual effects. Develop whole temporal characteristic in Chapter 15-16. including flicker effects & Dacey material on phasing

[develop the idea of signal amplitude variation and signal leading edge slope reduction as mechanisms for photopic to scotopic transition.

[data below is from Section 12.6 on The special case of L-channel

1. Gamma Differences within the spectra

The L channel now exhibits an overall square law response relative to the input irradiance. For comparison purposes, **Figure 13.5.3-1 [Figure 12.6]** also shows the linear relationships; Y = X/10 and Y = 2.5 + X/10. These relationships help to illustrate that the response of this block can track a linear function over significant amplitude ranges. The important feature that will be significant in Chapter 13 is that the square law curve falls below the dashed, offset, curve at both high and low input levels.

In photography, this same manifestation is recognized by the variation of "gamma" with wavelength, where gamma is the slope of the output density versus irradiance. It is typically 1.0, linear, in undyed emulsions and the short wavelength region of dyed emulsions; and 2.0 in dyed emulsions (or in a single dyed crystal of silver halide). In practice, most emulsions utilize a mixture of silver bromide and silver iodide which have different bandgaps, and hence, different cutoff wavelengths. Because of this difference, the transition from a gamma of 1.0 to 2.0 does not occur abruptly at a given wavelength.

Flicker intensity threshold (FIT) experiments have demonstrated this 2:1 relationship between the flicker sensitivity of the L- and M- channel many times.[47]

2. Decrease in L-channel sensitivity

When this relationship is processed in the secondary signal processing circuitry, the characteristics known as the photopic and scotopic spectral responses are seen to be manifestations of a common signal processing algorithm which utilizes slightly different chromophoric input signals. The primary difference is that the level of the L-signal drops more rapidly with irradiance than do the other channels (2 channels in trichromats and 3 channels in tetrachromats). This rapid decrease in the L-signal at the output of the translation stage causes the observed overall photopic spectral response to change to the scotopic response as the response due to the L-signal is lost. Figure XXX shows this phenomena with considerable clarity (from my earlier papers) for humans. Neumeyer & Arnold also noted and measured this process in Fish[48]. They explain that in going from 25 lx to 1.5 lx white room illumination, "the fish [goldfish] uses the ultraviolet, short-wave and the mid-wave [cone types] for its colour vision, but not the long-wave one."

3. Loss in spectral discrimination

With the decrease of the L-channel signal level relative to the other channels, there is a consequent loss in spectral discrimination in the region between the M- and L- channels apparently also accompanied by a recognizable Purkinje Shift. Although little data is available for humans in this regime, there is good data available for the Turtle[49].]

13.5.3.1 The P-channel wavelength discrimination function

The complete theoretical wavelength discrimination function of the P-channel can be calculated using the parameters of the Standard Human Eye and the equations of **Chapter 5**. This function is shown in **Figure 13.5.3-1**.

Figure 13.5.3-1 Wavelength discrimination function for the P-channel EMPTY of animal vision.

13.5.3.2 The Q-channel wavelength

[47]Kalloniatis, M. & Pianta, M. (1997) L and M cone input into spectral sensitivity functions: A reanalysis. Vision Res. vol. 37, no. 6, 799-811
[48]Neumeyer, C. & Arnold, K. (1987) Paper in preparation quoted in the next reference
[49]Neumeyer, C. & Arnold, K. (1987) Tetrachromatic colour vision in goldfish and turtle. in Seeing Contour & Color WW 105 N874 1987

discrimination function

13.5.3.2.1 Investigating Unique Yellow provides details of the system

The concept of unique yellow, a perceived response that is neither reddish or greenish, has been discussed for a very long time. The various anomaloscopes of history have typically used a narrow band light source in the region associated with unique yellow.

Histologists studying the retina have tried to establish the ratio of the number of L–channel and M– channel photoreceptors as a method of establishing the mechanism leading to a unique yellow. These studies have failed to show a relationship between the density of different spectral photoreceptors and the presence of unique yellow. In fact the ratio appears to be remarkably unrelated to the perception of color in humans. A more relevant factor is the state of adaptation of the visual system.

Hofer et al. have recently addressed the organization of the human retina and provided many references[50]. They did not consider the possibility of UV sensitive photoreceptors in the human retina and their method of bleaching is not fully (or conceptually) adequate. They do provide considerable statistical data showing the wide range of L– to M– photoreceptors in the human retina and the poor correlation between the ratio of L– to M– photoreceptors and a value for unique yellow. Interestingly, the paper does not reference the paper by Yamauchi et al. prepared by many of the same authors[51].

Yamauchi et al. provided data on determining unique yellow under differential chromatic (or spectral) adaptation using a stimulus spot that was located at one degree in the nasal retina of the right eye. The observed circular spot was 0.52 degrees. They showed unique yellow varied over a range of six nanometers under significant chromatic adaptation and, like Hofer et al., showed psychometrically that unique yellow varied over a range of about two nanometers under dark adaptation in individuals where the L/M ratio varied from 1.15 to 3.79. Although the eyes were dark-adapted, the intensity of the stimulus was apparently high enough to result in color constancy, intensities in the photopic regime.

Combining the data of Hofer et al. and Yamauchi et al. leads to a clear understanding of the signal processing in the Q–channel of chrominance.

The major question is how are the signals from the various spectrally-specific photoreceptors combined?

The architecture of the neural system makes it clear that the chrominance channels are formed by the differencing of signals in the horizontal and/or amercine cells of the retina. These cells receive signals from one spectral class of photoreceptor cells at their inverting input and from a second spectral class at their non-inverting input. The output of the photoreceptor cells has been shown to be a voltage in the previous chapter. The question then becomes, do the differencing neurons operate in the voltage mode or the current mode? In the voltage mode, the signals from multiple individual photoreceptors are averaged before differencing. In the current mode, the signals from the multiple individual photoreceptors are summed before differencing. The relative density of the L– and M– photoreceptors would be important in the current mode but of only secondary relevance in the voltage mode.

The fact the differencing neurons of the chrominance channels are operating in the voltage mode appears quite clear. They receive voltage signals from the photoreceptors and average the signal level before differencing. Their output signal is also a voltage at their pedicles. The result is a chrominance signal that is bipolar, is based on the average value of the voltages applied to its two groups of neurites, and exhibits a null that is near 575 ±1 nm under color constancy conditions (no chromatic adaptation). This null is taken as the unique yellow point in this work. **Section 17.3.4** of this work will develop the New Chromaticity Diagram for Research based on differencing in the P– and Q– channels and nulls near 494 nm (unique aqua) and a unique yellow at 572 nm.

Figure 13.5.3-2 compares recent data from Yamauchi et al. and two potential models of Q–channel chrominance signal processing. The solid circles were points measured in their study. The triangles were measured earlier by

---

[50]Hofer, H. Carroll, J. Neitz, J. Neitz, M. & Williams, D. (2005) Organization of the human thrichromatic cone mosaic *J Neurosci* vol. 25(42), pp 9669-9679

[51]Yamauchi, Y. Williams, D. Brainard, D. Roorda, A. et al. (2002) What determines unique yellow, L/M cone ratio or visual experience? *SPIE Proc* vol 4421, pp 275-278

xxx. The sloping line shows the predicted performance based on a current-mode model (where the signals are based on the relative density of the L– and M– channel photoreceptors) fails. The horizontal line represents an alternate voltage-mode model that averages the signal produced from the L– and M– channel photoreceptor ensembles before differencing them (regardless of their relative density). Based on all of the test data, Yamauchi et al. conclude, "There is no correlation between cone ratio and unique yellow settings." There appears to be a high correlation between the data and the voltage-mode signal processing model used in this work.

The two data points acquired by Yamauchi et al. are not centered on the data of xxx. As a result, it is difficult to determine a precise nominal value for unique yellow from these two small data sets.

Figure 3 of Yamauchi et al. shows the unique yellow wavelength can be driven off nominal by chromatic adaptation. They used a unique protocol that involved extended time intervals (evaluation more than 12 hours after the end of the chromatic adaptation period). Under shorter term protocols, larger changes in the value of unique yellow can be expected. The abnormal value for unique yellow is seen to drift back to the nominal value in accordance with the dark adaptation function. Their experiments show an abnormal unique yellow reaches an asymptotic value after about a week of adaptation. It can be assumed the progression was exponential. Full recovery also took an extended interval (weeks) suggestive of subtle changes in the chemical environment adjacent to the neural circuits. An alternate possibility involves lack of adequate control of the state of adaptation of the individual due to the lighting in the environment.

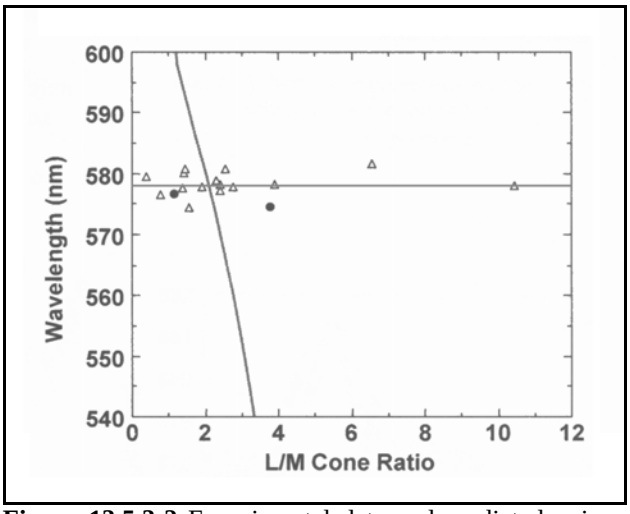

Figure 13.5.3-2 Experimental data and predicted unique yellow based on two models. The horizontal line represents a voltage-mode model of the signal processing system independent of the L/M ratio. The sloping line represents a current-mode model dependent on the L/M ratio. See text. Modified from Yamauchi et al., 2002.

The size of the ensemble of spectrally-specific signals summed at the inverting or non-inverting input in a specific differencing neuron may be important. The retina is organized differently within the foveola and outside the foveola. There are indications the signals from the photoreceptors of the foveola may not undergo differencing in the retina but be differenced within the thalamus. The suggestion being that the signals from the photoreceptors of the foveola are differenced in the thalamus at a much more individual basis to achieve maximum color differentiation along the edges of detected features. This suggestion does not necessarily preclude differencing at the ensemble level in the retina for signals propagated separately to area 17 of the cerebral cortex.

13.5.3.2.2 Investigating the precision of the synaptic connections

The question arises as to how the photoreceptors of a specific spectral sensitivity are connected to an appropriate neurite of a horizontal or amercine cell to the exclusion of other spectral types.

Hofer, Singer & Williams have offered significant test data that suggests the isolation of the spectral channels may not be perfect in these situations[52]. Using the second generation adaptive optics ophthalmoscope at the University of Rochester, they were able to stimulate individual photoreceptors with a high degree of specificity using brief flashes of 500, 550 and 600 nm light (10-25 nm interference filters). Using only these wavelengths under threshold conditions, six subjects reported perceiving eight different colors along with white and "indescribable." While the reports of white and indescribable are compatible with the threshold situation, the very low perception of green under these conditions (except for subject AP) is surprising. The data in Table 1 is heavily weighted toward perceiving white or indescribable except for the 600 nm stimulus. That stimulus produced predominately red or orange responses (except for subject YY who consistently reported his perceptions as indescribable in a majority of cases regardless of the wavelength of stimulation).

---

[52]Hofer, H. Singer, B. & Williams, D. (2005) Different sensations from cones with the same photopigment *J Vision* vol 5, pp 444-454

Hofer et al. focused their attention on stage 1 photodetection and did not consider the stage 2 signal processing associated with these photoreceptors. Thus, they suggest photoreceptors of one spectral type may detect light from significantly outside their spectral range under these threshold conditions. The alternate possibility that the individual photoreceptor at various locations might be mis-wired into the wrong neurite at the start of the chrominance channel was not considered.

No neurophysical data was presented to support the global psychophysical claim that the photoreceptors were susceptible to excitation by light outside of their nominal absorption spectra. The data set appears too small to draw any conclusion about mis-wiring or false reporting by a spectrally specific photoreceptor.

13.5.3.3 The composite wavelength discrimination function

13.5.3.4 Review of the relevant literature

The literature contains a great deal of experimental data related to the spectral performance of the animal eye taken under a wide variety of conditions, some photometric, some electrophysiological, some psychophysical and some which might be called application oriented. Each type involves a different set of relevant control parameters and provides a different confidence level in the conclusions that can be drawn from the results.

There is a great deal of psychophysical data that has been interpreted by the investigators in terms of paired spectral differences such as S-M etc. but there is much less actual biophysical data to support this interpretation.

13.5.3.5.1 Photometrically related results

Figure 13.5.3-3 [Figure 13.5.3-XX(a)] provides a cartoon relative to the collection of photometric data on the chromophores. [[this figure should be redefined in terms of the absorption cross-section of a structured chromophore, for both the isotropic and enhanced absorption component]] and loosely based on the Electromagnetic Theory of Light.

This cartoon was drawn to support a discussion involving bi-refringence and dichroism in OS. The discussion centered around the effects of changes in index of refraction with polarization. The model employed appears to be a “floating model”, particularly in the sense that it did not address the full transmission coefficient, which consists of the real (or absorption) part and the imaginary (or phase delay) part of the material under test. The discussion drew the conclusion that the absorption coefficient of a material was in some way directly related to its phase delay coefficient. By expanding the model, it might be shown that the imaginary part played a role in whether illumination entered the material at all but it is difficult to see how the imaginary component could significantly affect the absorption coefficient. The discussion also took a very simplistic view of the index of refraction in the vicinity of a spectral absorption peak in a material. The index of refraction changes value very dramatically in this vicinity, in theory passing through a discontinuity at the resonance point of the absorption characteristic[53].

Figure 13.5.3-3 Cartoon describing the collection of spectrographic data of photoreceptor Outer Segments EMPTY.

An alternate interpretation of this cartoon is shown in **Figure 13.5.3-4 [Figure 13.5.3-XX (b)]**. In this figure, the orientation of the individual molecules is quite different: and there are two relevant regions in each disk, the large surface area of the disk and the more limited area

[53]Rossi, B. (1957) Optics Reading, MA: Addison-Wesley Publishing pg. 403

associated with the edge. In this model, all of the chromophoric material is present in a liquid crystalline state wherein the long axis of each chromophoric molecule is perpendicular to the surface of the disk and all n and π electrons are shared in electronic planes parallel to the surface of the disk. In this cartoon, illumination incident along the axis of the OS has a poynting vector that is parallel to the axis of the chromophores in each surface of the disk and the slow-wave structure of the chromophore in a liquid crystal environment provides nearly ideal coupling between the energy in the illumination and the absorption properties of the molecule. This *enhanced absorption* (or resonance absorption) situation for illumination parallel to the OS axis is independent of the polarization of the incident radiation. For illumination incident transverse to the axis of the OS, the situation is different; the light initially encounters the chromophores perpendicular to the edge of the disk and then encounters the chromophores associated with the surfaces of the disk. For the few chromophoric molecules associated with the disk edge, the Poynting vector is aligned to the axis of the molecule and enhanced absorption can be expected regardless of polarization angle. The light that is not absorbed at the disk edge now encounters the chromophoric molecules associated with the disk surfaces at an angle perpendicular to the axis of the molecule. In this case, the only absorption will likely be due to the *intrinsic absorption* characteristic of the individual molecule. These molecules are not randomly oriented so the absorption can be expected to be polarization sensitive.

It is clear that the polarity of on-axis illumination is irrelevant in the case of human and similar vertebrate eyes. However, it appears that the polarity of transverse illumination can have a significant influence on the data collected.

The electromagnetic theory of light clearly shows the advantage of maintaining the absorption coefficient from being too large in which case, most of the illumination would be reflected at the surface of the disk regardless of the index of refraction of the external medium. By limiting the number of electrons available to participate in absorption per disk, this reflection problem is avoided but some photons are necessarily left to be absorbed by subsequent disks. This appears to be the main reason why the chromophoric material is arranged in individual disks that are in turn arranged in a stack.

[[put in some data here re axial and transverse spectrophotometry]]

13.5.3.5.2 ERG related results

Granit & Wrede[54] have reported that the frog exhibits a spectral response that shifts from a photopic type to a scotopic type in a manner similar to humans, i.e. the peak response is at about 560 nm. at high illumination levels and is at 500 nm. at lower illumination levels. Their criteria was a constant amplitude b-wave. Davson[55], in discussing their data, places any spectral shift related to illumination level under the general name *Purkinje Shift*.

13.5.3.5.3 Application Oriented Results

Thornton[56] has provided spectral data for use in the design of lighting that is particularly interesting. He developed the spectral characteristics of the human eye based on its color-rendering index. The data matches the chromophoric data calculated herein to an excellent degree.

Repeating the warning in **Section 13.5.3** before proceeding, much of the visual spectrographic data taken in past years utilized relatively broad spectral filtering techniques. The results were highly smoothed waveforms which were said to be equivalent to the CIE standard spectrums. More recent spectra clearly show a dip between the spectral peak near 0.537 μm. and the peak near 0.610 μm. This advancement is clearly exhibited in the paper by Kalloniatis & Pianta[57]. The smoothness of the older spectral data in their fig 6 is easily contrasted with the newer data in their figs 1, 2 and even 3. Note: the peak near 0.610 μm. is an artifact of the logarithmic arithmetic and is not an actual peak in the spectral response of any photoreceptor. This fact was developed in the previous sections. **[[I don't understand about 0.610 nm.]]**

The work of Tomita[58] in 1965 using the carp fish is some of the most important early work in this area. His work focused on the retinal "layers intervening between the ganglion cell layer and the receptor cell layer" and the signals

---

[54]Granit & Wrede ( ) J. Physiol. (see Davson 5th pg. 396)
[55]Davson, H. (1990) Physiology of the eye. NY: Pergamon Press pg. 396
[56]Thornton, W. (1971) Luminosity and color-rendering capability of white light
[57]Kalloniatis, M. & Pianta, M. (1997) L and M cone input into spectral sensitivity functions: A reanalysis. Vision Res. vol. 37, no. 6, 799-811
[58] Tomita, T. (1965) Electrophysiological study of the mechanisms subserving color coding in the fish retina. Cold Spring Harbor, NY: Cold Spring Harbor Laboratory of Quantitative Biology

he described as of the S potential type, signals exhibiting a sustained response to light. His figure 9, using a spectrometer which was clearly shown in his figure 10 to be deficient in the blue, shows the presence of the three chromophoric spectra to be present in the Inner Nuclear Layers (INL); see **Figure 3.5.2-6**. The waveforms were electrically chopped by his test set; the considerable overshoot and slow rise times indicate the electrical probe was not properly compensated for stray capacitance. His figure 1, reproduced here as **Figure 13.5.3-4 [Figure 13.5.2-7**], clearly shows the presence of "triphasic, biphasic and monophasic waveforms in the INL; however, the text does not provide sufficient information to determine how these waveforms were generated in the animal. It appears that these waveforms were selected for presentation after color selective adaptation to accentuate specific features. Note also that curve (a) which he described as a luminosity type has a peak absorption wavelength of about 615 nm. and is clearly the absorption characteristic of a L - channel photoreceptor. He does estimate that the monophasic type accounts for 60% of the S potentials, the biphasic type accounts for 25% of the total and the triphasic type accounts for 15%. He also points out that the L channel signal is often very small in the triphasic type; but that its presence can be enhanced by suppressing the other components using adapting lights of shorter wavelength.

[[this paragraph is not in conformity to the previous paragraph]]
Because of the inadequacy of his spectrometer, the monophasic response in **Figure 3.5.2-7** cannot be considered as an accurate representation of the luminosity function of the carp eye. Looking closely at the waveforms in **Figure 3.5.2-7**, it is likely that (a) is a logarithmic summation of the L and M channels, (L + M), (b) is a logarithmic summation given by S + M - L and (c) is a summation given by S-M+L; all based on increased irradiance correlating with positive values of the symbols and relating to down in these pictures in the absence of inversion in the amplifiers. If the (a) trace is in fact, L + M instead of L + M - 2S, where S is quite small, the model proposed here would have to be modified to provide summation only in some replications of the first substage. It is premature to jump to this conclusion.

It is also important to note that Tomita uses Biphasic to mean a waveform having two peaks of opposite polarity. Either peak may actually contain signals from either one or two chromophoric signal channels. Thus biphasic does not imply a difference between two (and only two) signal channels.

Drujan & Laufer provided a book focusing on the work of Svaetichin in 1982[59]. It provides some useful graphics but does not provide the details of the instrumentation used.

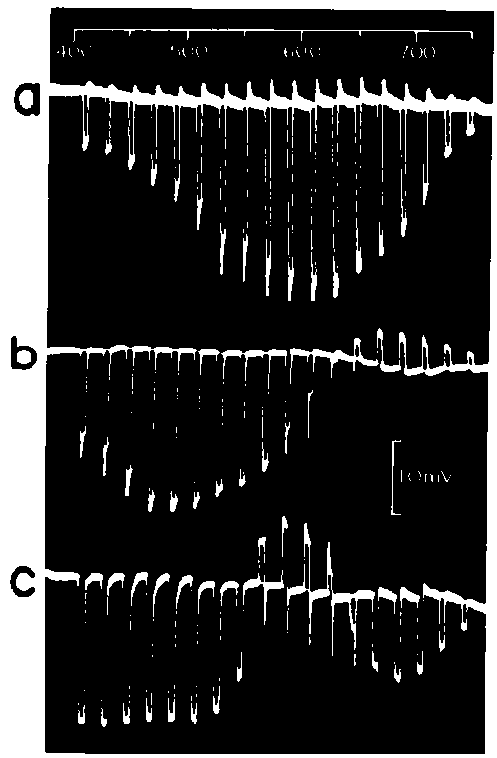

Figure 13.5.2-7 Processed Spectral Channels in the Carp from Tomita. (a) appears to be a summation channel, L + M (b) appears to be S+M-L and (c) appears to be S-M+L

Figure 13.5.3-4 Waveforms from Tomita showing monophasic and biphasic types. **EDIT** From Tomita (196X)

[59]Drujan, B. & Laufer, M. (1982) The S-potential. NY: Alan R. Liss

Figure 13.5.3-5 [Figure 13.5.2-8] presents similar waveforms for the honeybee[60]. (a) clearly shows UV-S-M or -UV+S+M depending on the original polarity of the signals. However, no data is presented involving differences involving only two signal channels. The peak wavelengths of the S and M chromophores are obscured in this figure due to the signal addition process involved. (b) more clearly shows the peak spectral sensitivities of the honeybee to be almost exactly as predicted by the Rhodonines proposed in this work. The following table summarizes the data from these investigators and the predicted data for the Rhodonines 11, 9 & 7:

Source	UV	S	M	Temperature
Menzel et. al.	335	435	540	Unspecified
Rhodonines	332	437	532	37 Celsius

Further discussion may surface the temperature used in Menzel's work and allow a re-computation of the predicted peak wavelengths for that temperature. This process would allow the systematic variation between their data and the Rhodonines at 37 Celsius to be reduced to below the value of 4.3 nm shown above; probably already below the measurement error level in practice.

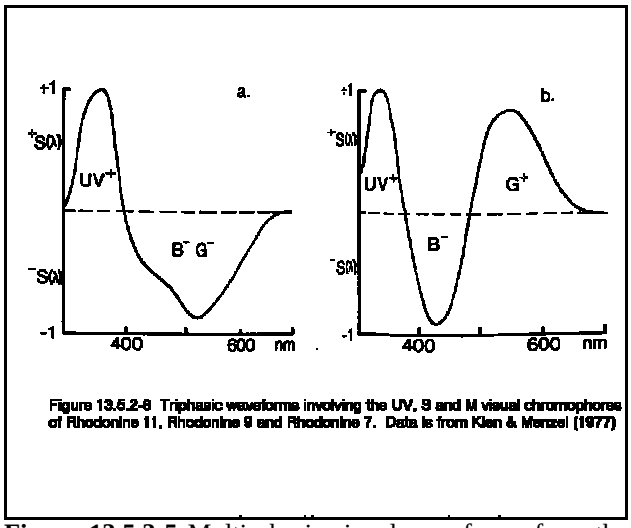

Figure 13.5.3-5 Multi-phasic signal waveforms from the honeybee **EDIT**.

Substage 2 of stage 2B

This substage probably completes the chromatic signal processing in the retina prior to encoding. It involves a second stage of differencing which provides additional nodal points with the spectral space of the CIE ----- diagram.

The same differencing circuit configuration is used as shown in Figure **13.5-2??** for substage 1. The outputs remain in voltage form and can be described (for the human trichromat) in symbolic form as;

+ 2M-S-L
+ 2S-L-M
+ 2L-M-S

13.6 The Second Lateral signal paths

13.6.1 The "Appearance" signal paths (or separate into path to Pretectum from path to LGN
13.6.2 The detailed appearance model
13.6.2.2 The expanded circuit diagram
13.6.2.2.2 The chrominance signal path
13.6.3 The complete appearance response
13.6.3.5 Review of the relevant literature
13.6.3.5.1 Photometrically related results
13.6.3.5.2 ERG related results
13.6.3.5.3 Application Oriented Results

Figure 13.6.1-1 [figure 13.5.4-X]
Block diagram

[60] Menzel, R. & Backhaus (1989) Color vision honey bees: Phenomena and Physiological Mechanisms. in Stavenga, D. & Hardie, R. Facets of Vision. Berlin: Springer-Verlag

56 Processes in Biological Vision

Figure 13.6.1-2 Detailed circuit diagram

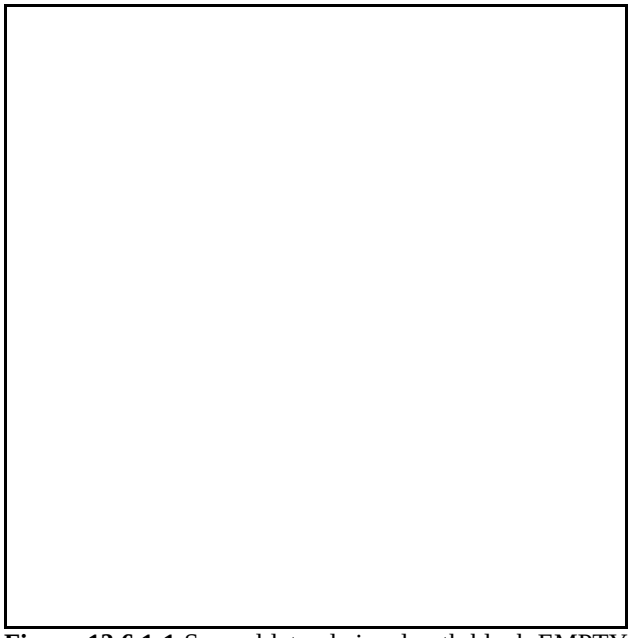

Figure 13.6.1-1 Second lateral signal path block EMPTY diagram

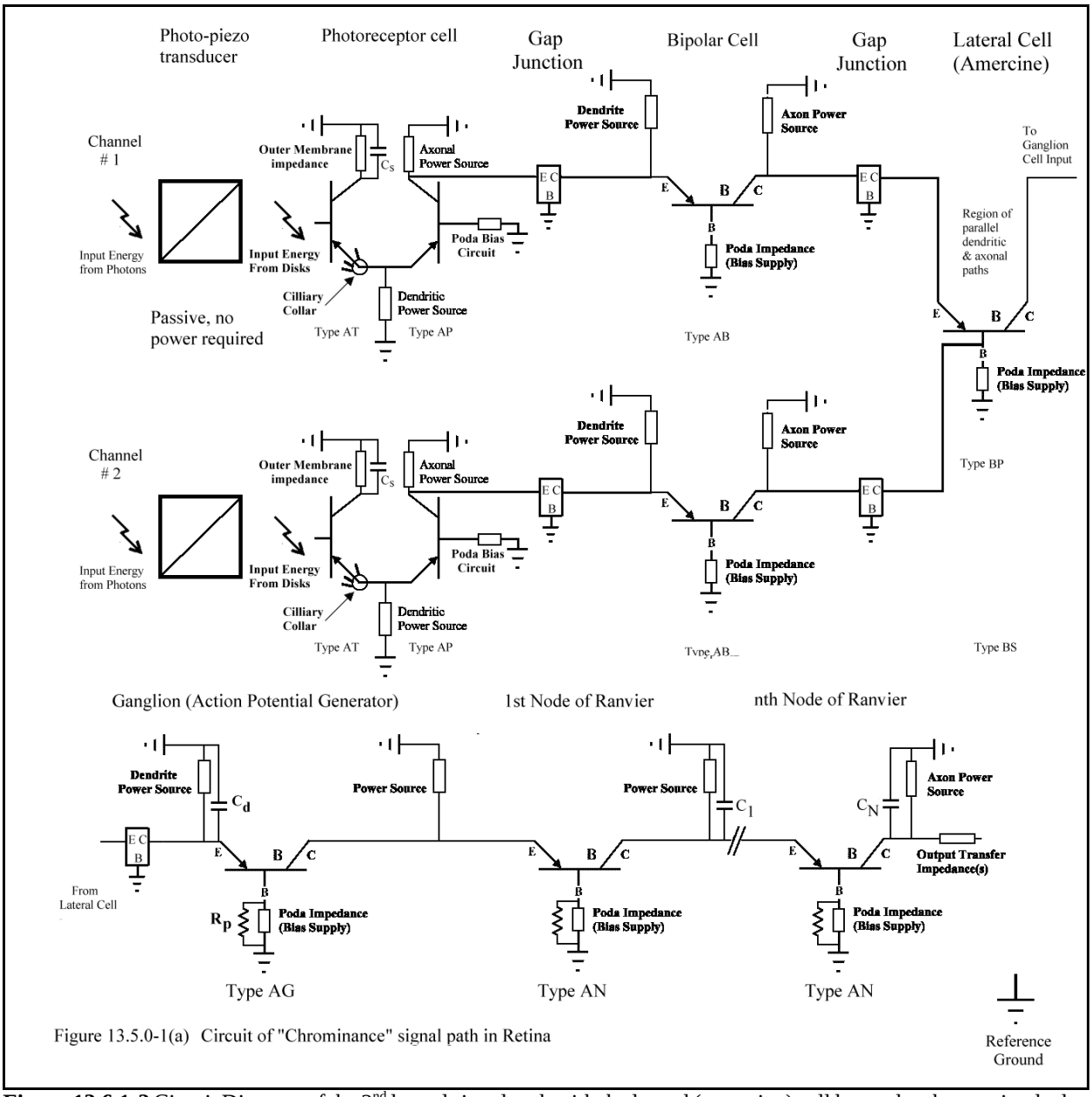

Figure 13.5.0-1(a) Circuit of "Chrominance" signal path in Retina

Figure 13.6.1-2 Circuit Diagram of the 2nd lateral signal path with the lateral (amercine) cell located at the proximal edge of the INL.

13.7 The temporal aspects of these signal paths

The non-stationary aspects of the eyes (both in time and space) are critical to the operation of the visual system of *Chordata* and humans. These characteristics have been essentially ignored in the literature, except for a few important investigators, and treated as a novelty. This action has retarded the development of understanding of the system significantly.

Our understanding of the temporal aspects of vision is largely due to the monumental works of Yarbus in Russia[61], Ditchburn in Great Britain[62], and to a lesser extent Riggs in the USA[63]. There have also been occasional limited investigations by others that are important. There has been little new research in this area since the 1960's because of the lack of an adequate model of the visual system. These works all concentrated on the psychophysical *results* of interfering with the normal operation of the eyes rather than a theoretical discussion of the underlying mechanisms and concepts.

Most people in the vision community, including active researchers in the field, are unaware of the fact that the human eye is blind in the absence of motion between the scene in object space and the line of sight. And, even those active in the specific field such as Ditchburn have failed to offer a plausible explanation for the mechanism involved in the phenomena[64]. The phenomena is a direct result of the method of implementing the adaptation amplifiers of the photoreceptor cells. In order to achieve acceptable operation of the visual system over an extended illumination range, the low frequency response of the individual photoreceptors of the visual system (below 0.1 Hz) has been sacrificed. It is the rate of change in the signal applied to the base of the Activa forming the adaptation amplifier that is the critical parameter. These changes can be entirely temporal or involve motion perpendicular to the line of sight that is extensive enough to move from one photoreceptor to another. To achieve an adequate rate of change, either a high contrast event can occur over a relatively long time or a low contrast event must occur over a short period of time. High contrast changes occurring in significantly less than three seconds can produce useful signals at the pedicels of the photoreceptor cells. For fine detail, changes must occur in even less time to be observable.

The originating phenomena is based entirely within the adaptation amplifiers of the signal manipulation stage of the retina. Thus, the phenomena is a local one. Small groups of cells illuminated by a constant illuminant portion of a scene will fail to produce any signal at their pedicels. The perceptual and cognitive elements of the system are arranged to handle this situation. They do so by employing a fill program, similar to a computer fill program. Such programs determine a border based on edge responses and then assign a color to the area within the perimeter based on other ques. Such a technique is used routinely to fill in the “blind spot” of the retina but it is also used to fill in any other area of inadequate detail associated with a change. Yarbus has explored this situation in detail using constant illuminant areas within constant illuminant areas and varying the contrast of the perimeter between the areas. The results are a fertile source of ideas for the magician.

Many of the lower members of *Chordata*, as well as most members of *Mollusca* and *Arthropoda*, are able to operate successfully without being able to perceive stationary objects within and relative to their field of view. However, human and other higher chordates are not able to operate i this regime and other techniques have been developed to overcome this problem.

To overcome the inherent inability of the visual system to see stationary or slowly changing events in the field of view, methods have been found to introduce relative motion between object space and the line of fixation of vision. This has been accomplished by using the oculomotor system in a specific mode and incorporating that system in a servo loop along with the Precision Optical System of the midbrain and the signaling sytem of the retina. The system can be described as a synchronous image information modulation and demodulation system that overcomes the lack of low frequency response in the signaling path due to the adaptation amplifiers (which remain present within this loop). The effect is to modulate the image data of interest, transmit it around the low frequency rejection filter of the adaptation amplifier, and recover the data as one of the outputs of the servo loop at the tectum. This servo loop operates primarily in the temporal domain. There are no frequency domain components in the loop except for the low frequency rejection filter. The details of the servo loop are discussed in **Section 15.2.4.**

Ditchburn concluded his research in this field[65] with the note that “It has been shown that certain small scanning movements of the eye are essential for visual discrimination, and it is likely that the main information is obtained from receptors near to boundaries between light and dark areas in the visual field.” His idea is clearly equivalent to

---

[61]Yarbus, A. (1965) Original in Russian from the Nauka Press. Available in English as Eye movements and vision (1967) NY: Plenum Press. Sometimes cataloged under IArbus, A.
[62]Ditchburn, R. (1973) Eye movements and visual perceptiohn. Oxford: Clarendon Press
[63]Riggs, XXX. Ratliff, xx. & Cornsweet & Cornsweet (1953)
[64]Uttal, W. (1981) A taxonomy of visual processes. Hillsdale, NJ: Lawrence Erlbaum Associates. pg. 784
[65]Ditchburn, R. (1976) Light. NY: Academic Press. Pg. 773

that described above. Kelly stated his concluding position much more succinctly[66]: “Our results suggest that retinal image motion (scene to photoreceptor mosaic) is the *sine qua non* of vision.” The parenthesis was added for clarification.

The extreme sensitivity of the visual system, as well as the small diameter of the photoreceptors, makes experimentation in this area difficult. Only a few investigators have been able to achieve a sufficiently low noise level in their instrumentation to demonstrate the presence of the fine tremor motion used by the eyes to overcome this lack of intrinsic imaging capability.

13.7.1 Basic architecture

13.7.2 Summary of reported results

13.7.3 Consequences to the laboratory investigator

13.8 Abbreviated Pathways

[[look at Limulus and maybe a few words about Insecta without bipolars and therefor few gap junctions also]]

13.9 Summary

[*****consider making this, combined with 13.11, a PART D Summary
[*****review Werblin & Dowling (1969) in Abrahamson (‘81) before finalizing this summary]

The overall signaling system of the animal eye is an exceedingly effective (and efficient) one. It utilizes the very minimum number of widely different mechanisms in a unique order to achieve nearly perfect performance over the broadest possible range of input conditions. After a minimum amount of time, any large signal input is compensated for and the overall small signal output remains a true representation of the overall contrast in the small signal input.

Large signal compensation is performed entirely within the first signal processing mechanism, i.e. within the photoreceptor transducer (the primary part of the outer segment) and its interface with the first sensing neuron (part of the inner segment). This one compensation mechanism controls both the optimal operation of the individual photoreceptor channels within the eye over an extremely wide brightness range; it also controls and provides the so-called color constancy aspects of vision since it occurs in the individual color channels before the signal matrixing function which provides the signals to the brain which in turn support the psychophysical perception of color.

There is no requirement for metabolic energy to be provided to the transducer of the outer segment. It is a non-living entity, acting analogously to a piezo-electric crystal; its electronic state is raised by input photon excitation and its electronic state is lowered by the act of exciting the neuron associated with it.

The exact performance characteristics of the neuron associated with the individual photoreceptor are difficult to measure because of; the size of the neuron and the fact its output function operates in the current mode. The only voltage that can be accurately measured is that associated with the input capacitance of the next circuit, the analog mode "bipolar" neuron. The photoreceptor neuron is most probably the highest frequency sampling neuron in the animal body. It can utilize a high sampling frequency because the output signal does not have to be relayed further by any other binary mode neuron. The high sampling frequency leads to a large metabolic power consumption per unit cell volume.

---

[66]Kelly, D. (1979) Motion and Vision: II Stabilized spatio-temporal threshold surface. J. Opt. Soc. Am. vol. 69, no. 10, pp. 1340-1349

60 Processes in Biological Vision

The interconnections of the Outer Plexiform Layer are extremely complex and variable over the map of the retina. They have been optimized for an individual species over long genetic time scales. As indicated above, the mode of transmission between photoreceptors and the bipolar neurons appears to be an electronic one; the neuron of one or more photoreceptors provides a charge that is integrated on the input membrane (capacitance) of the bipolar neuron.

When discussing retinal neurons, the reader must be careful to separate the histological (and historical) definition of a bipolar cell (a neural cell with two definable portions on opposite sides of the cell body) from the functional definition (a neural cell exhibiting an analog or continuous transfer characteristic typified by positive and negative signal excursions about a reference level). In fact, all of the neurons of the Inner Nuclear Layer of interest here are defined functionally as bipolar, they process bipolar (or analog) signals.

When describing the functional characteristics of these neurons, it is important to be more precise than in the past. While it is true these neurons algebraically sum the input signals to that cell, the signals actually represent the logarithms of the photon input signals. Furthermore, for many of the neurons, the signals are not summed at the input of the cell but at the output. The input signals are functionally isolated from each other. It is the currents generated by each in the inputs which are summed at an output node. Thus, the analog neurons of the retina create an output signal which is proportional to the algebraic sum of the individual input signals--where these signals are logarithmically related to the photon flux exciting the photoreceptors.

A few of the bipolar neurons of the Inner Nuclear Layer, generally labeled the "midget bipolars" appear to connect to only one photoreceptor at their input and serve only one ganglion neuron at their output. They operate as simple analog amplifiers to cause the proper excitation of the ganglion cell. The many other morphologically identifiable neuron types in the Inner Nuclear Layer perform the many complex signal matrixing functions of the eye.

Secondary Signal Processing can be delineated into:

+ First order processing
    - "Alarm" notification
    - spectral summation
    - initial spectral differencing
+ Second order processing
    - secondary spectral differencing

The major part of the first order signal matrixing function is probably not color related. It probably involves aggregating the outputs of many photoreceptors in a non-summation mode, i.e., providing an output when any individual input exceeds a threshold, in order to provide the maximum possible sensitivity to change detection anywhere in the field of view--a situation associated with "alarm". This summation involves all of the photoreceptor channels; short, medium and long wavelength, indiscriminately.

Function "A" of the first order color signal matrixing sums the short, medium and long wavelength color related photoreceptors to provide a wide overall spectral sensitivity. This channel operates in a three color "mode" under highlight level conditions and provides the observed "Photopic" spectral response of psychophysics. Under low light conditions, the signal level of the long wavelength ("square law") channel falls relative to the other two channels resulting in the effective summation of just the short and medium channels into what is known and reported psychophysically as the "Scotopic" spectral response.

Function "B" of the first order color signal matrixing subtracts the signals from the short, medium and long wavelength photoreceptors to provide a psychophysical perception of color. This is a relatively coarse indication based on only three maxima and three null points around the spectral triangle.

In a typical amplifier, it is merely necessary to increase the gain to convert from a signal summing system to a thresholding system for generating "alarm" signals. Similarly, by reversing the sensitivity of one or more of the inputs to the summing amplifier, subtraction is accomplished just as easily as summation.

The second order color signal matrixing subtracts the signals from the first order color matrixing and thereby provides a second set of difference signals which provides additional cues concerning the perception of color in the input image.

The basic visual sensing plan and the first order color matrixing are clearly in conformance with the "Young-Helmholtz Theory" of color vision--only three photoreceptor types are utilized to detect full color vision; and to

subsequently perceive the Photopic spectrum under high illumination conditions and the Scotopic spectrum under low illumination conditions.

The second order color matrixing plan is clearly a source of "Herring Theory" signals--only, most interestingly, in a more complete form than generally attributed to Herring and the Herring School, i.e., there are three sets of true color differences not two and there is no output associated with a black minus white signal.

The vision related ganglion cells accept primarily, if not exclusively, analog input signals from a variety of bipolar neurons and perform the basic modulation function. The received signals are voltages and the output signals are of the time delay modulation type on a nominal frequency carrier. That is to say, under null conditions, the ganglion neuron will fire at a fixed time delay after its previous firing. This time delay can be reduced or extended as a function of the voltage on its input node. The ganglion neuron is typically "wired" to increase its firing rate in the presence of higher illuminations and to lower its firing rate in the presence of lower illumination signals. This appears again to be a genetic choice related to an "alarm" syndrome.

The ganglion cells operate as blocking (or relaxation) oscillators in the language of electronics; a type that was widely used in the vacuum tube era of the 1930's-50's. Whereas most animal neurons are acting as repeaters of a binary pulse signal and are of the driven class of blocking oscillators, the visual ganglion cells are affected by a bipolar analog signal at their input and are of the free running class of blocking oscillators.

The fact that the ganglion cells are free running oscillators provides an interesting additional capability. In the absence of an input illumination signal, the oscillator provides a series of equally spaced output pulsed. The higher cognitive centers of the brain can use this "supervisory signal" to confirm that the signaling channel is in working order but receiving no information from the preceding circuitry.

13.10 Pharmacology

In reviewing the signal path diagrams presented above, it is apparent that pharmacological preparations can have many different effects on the vision system. Looking at the straight through path of **Figure 13.10.1-1 [Figure 13.4.0-1]**, it is seen that a pharmacological preparation could change the conductivity of the signal paths, particularly in the dendroplasma and axoplasma; it could also disrupt the liquid crystalline lattice of water molecules in the narrow space of the gap junctions, and the similar space within the junction spaces internal to the various cells. By blocking access to the cell walls by metabolic materials, the voltages and impedances of the various power sources could be altered. Similarly, by changing the characteristics of the cell walls, the operating voltages and impedances of the various power sources could be changed; this is particularly important with regard to the outer membrane impedance in the collector circuit of the Type AT activa of the photoreceptor cell, since it would have a distinct effect on the sensitivity of the eye with regard to illumination level. However, it is more easily recognized in the laboratory through the change in various resting potentials and their subsequent change with illumination.[[provide ref. here]]

Figure 13.10.1-1 Pharmacology EMPTY

(Active) SUBJECT INDEX (using advanced indexing option)

(Inactive) DEFINITIONS INDEX (Use individual marks)