Excerpts from

The NEURONS and NEURAL SYSTEM:
a 21st CENTURY PARADIGM

This material is excerpted from the full β-version of the text. The final printed version will be more concise due to further editing and economical constraints.

A Table of Contents and an index are located at the end of this paper.

A few citations have yet to be defined and are indicated by "xxx."

James T. Fulton
Neural Concepts

jtfulton@neuronresearch.net

August 1, 2016

[xxx consider connexon, connexons instead of conexus, conexuses]

2 The Functional Configuration of the Basic Neuron [1]

Notice: The Coursera organization has recently begun offering free courses claimed to be at the college level. The course entitled "Computational Neuroscience" by two little known instructors, Adrienne Fairhall, Rajesh P. N. Rao[2], from the University of Washington is based on the literature repeating endlessly the state of the art in the cytology of the cell and neurons from the first half of the 20th Century–specifically prior to the dawn of semiconductor physics, the discovery of the transistor, and the more recent discovery of the biological transistor. The latter is now in commercial use in organic light emitting device screens in cellphones and even television monitors. The existence of the biological transistor, a three-terminal device, totally deprecates the two terminal device, based on the Hodgkin-Huxley conceptual explanation of their totally empirical experiments, that is the basis of the course.

The following material is in no way compatible with that new telecourse (May 2013). No further discussion of the telecourse except to point out that it remains possible to obtain a PhD in computational neuroscience without having demonstrated any detailed knowledge of how the neuron actually works.

2.1 Introduction

It is a remarkable fact that the extensive neuroscience literature contains virtually no information describing the relationship between the input signal(s) applied to a neuron and the resulting output signal. This chapter will focus on this input-output relationship. It is also a fact that the neuroscience literature contains virtually no information concerning the cytological structure internal to a neuron. This chapter will address this subject, but a more extensive discussion of the morphology of the neuron will be presented in **Chapter 5**. It is also a fact that the neuroscience community has long accepted the concept of simple heavy inorganic ions (sodium, potassium and chlorine ions) moving freely through the liquid-crystalline bilayer cell wall of a neuron in the total absence of data showing this to be possible and considerable data showing such passage is not possible.

The neuron has evolved to satisfy a wide variety of applications within the neural system as suggested by the block diagrams of **Chapter 1** (**Sections 1.1.2, 1.1.4** and **1.2.7**).

As noted elsewhere in this work, Hodgkin & Huxley were involved in exploratory research and were grasping for explanations as to what they observed. Their background, and that of the scientific community was relatively crude in the 1930's and 1940's. While they were unable to demonstrate that any ions passed through their axolemma, they assumed that ions did because of the difference in relative concentration of ions on the two sides of their axolemma. This assumption and their assertion of an "Independence Principle" to explain their assumption has

---

[1]Released: August 1, 2016

[2]https://www.coursera.org (The only current course is on Computational Neuroscience)

proven unsupportable in modern science. Unfortunately, the Don's of the natal biochemical community of the 1960's, also relying on their limited scientific base, ordained that Hodgkin & Huxley were right and furthermore, the operation of the neural system was fundamentally based on chemical reactions. Their position has been very difficult to overcome because of its repeated assertion by their protégée in introductory textbooks. This situation has continued to the present day where Purves et al[3]. dedicate their unit 1 (particularly chapters 2 through 4) to regurgitating the Hodgkin & Huxley hypotheses, including their adoption of the euphemism relating the discharging of the axoplasm potential to an inrush of sodium ions (rather than a discharging of the axoplasm by electrons exiting the space via the internal amplifier) and the recharging of the axoplasm by an outrush of potassium ions (rather than the inrush of electrons from the glutamate/GABA power source) in the absence of any data to this day showing the axolemma is permeable to these heavy ions. The fact that ions of these heavy ions do not exist alone when in solution has also escaped the attention of these protégée (**Section 8.5.4.4**). That section also shows the coordinate complex of the sodium ion and water is significantly larger in diameter (9 Angstrom) than the putative internal diameter of the pores in the axolemma typically proposed in the literature (about 2 Angstrom).

The hypothesis that the permeability of the axolemma is a variable is also unsupported by any physical chemistry. Such variation in permeability is not required in the context, and hypotheses, of this work, except in the fact that modified neurolemma can form an ideal electrolytic diode. Such a semiconductor diode exhibits a deterministic and well characterized variable impedance to electrons.

Steriade, et. al. have addressed the difficulty of interpreting neuronal oscillations in brain functions without any understanding of the underlying mechanisms[4]. Their position is that the problem is the lack of a formal mathematical base for these mechanisms. However, mathematics does not provide a base for a mechanism, it provides a framework. A base is more fundamental and relies upon physics, electronics and chemistry. The oscillatory mechanisms associated with neurons are based on the active element within them, the Activa. The oscillatory performance of neurons is identical to those associated with man-made electronic circuits. The mathematical interpretation of both type of devices is well documented in the electronics literature. This will be demonstrated in this chapter.

Their suggestion that a set of differential equations based on phase plane analysis can describe the oscillations of a neuron is correct. However, their supposition that the phase plane used is derivable from an autocatalytic (chemical) mechanism where the end product further activates the enzyme creating it appears unproven[5]. The resulting hypotheses, involving contorted chemistry, are not needed when the basic physics of the situation are examines as in this and the preceding chapter. This work takes exception to the claim of Steriade, et. al. that "In fact, chemically mediated oscillations, especially as it relates to the $g_{K(Ca)}$ is a most important component of the intrinsic electrical properties of neurons." After providing a rationale for the autocatalytic hypothesis, they conclude "In addition, other ionic conductances are present that endow these neurons with a more complicated set of oscillatory properties." This is the classical solution of solving a problem based on an inadequate understanding of the fundamentals. The investigator merely introduces more variables into the equations until a sufficient degree of flexibility is available to meet any requirement. Rather than introducing additional ions flowing with and counter to the local electric field, there is a need to re-examine the original chemically-based hypothesis.

---

[3]Purves, D. Augustine, G. Fitzpatrick, D. et al. (2004) Neuroscience, 3rd Ed. Sunderland, MA: Sinauer Associates.

[4]Steriade, M. Jones, E. & Llinas, R. (1990) Thalamic oscillations and signaling. NY: John Wiley, pp 132-133

[5]Goldbeter, A. & Moran, F. (1988) Dynamics of a biochemical system with multiple oscillatory domains as a clue for multiple modes of neuronal oscillations *Eur Biophys Jour* vol 15(5), pp 277-287

4 Neurons & the Nervous System

2.1.1 The fundamental neuron of biology

Figure 2.1.1-1 shows the basic schematic of a neuron that will be discussed in this chapter. The expression of the neuron in this figure is significantly modified from one by Shepherd in Byrne & Roberts (1997, page 91). This electrolytic configuration supports a fundamental difference from the historical two-terminal neuron of Hodgkin and Huxleys. The neuron and the biological transistor (the Activa) within it are three-terminal electrolytic devices. These elements are developed in detail in **Section 2.2** & **2.3**. The small numbers shown in this figure were not addressed in the original work except to tie that part of the neuron to simple waveforms that Shepherd related to operation of the stage 3 signal projection neuron. These waveforms were not sufficiently precise to be included here. The location of the Activa is shown by dashed lines in this annotated figure and is included in the region frequently described as the hillock in stage 3A neurons.

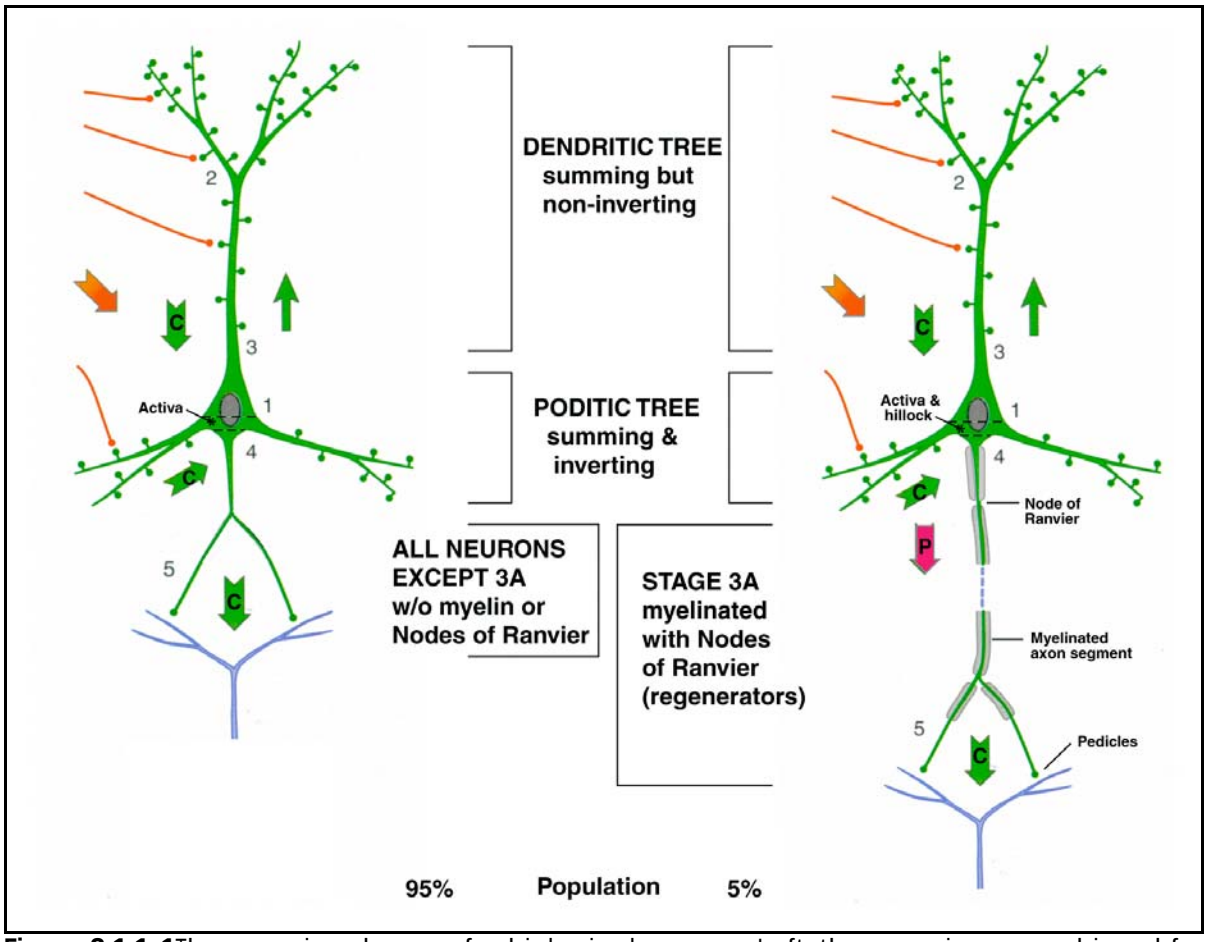

Figure 2.1.1-1 The generic schema of a biological neuron. Left; the generic neuron biased for analog operation. Right; same generic neuron with an extended (multi-segment axon and biased for pulse (action potential) generation. The individual axon segments of pulse generating neurons are myelinated to reduce signal attenuation between Nodes of Ranvier.. The combination of the dendritic and poditic trees is frequently described as a "bi-stratified dendritic tree." Red elements, examples of axons of antidromic neurons. Blue; neuritic structures of orthodromic neurons. C; signal transmission by conduction in these regions. P; signal transmission by propagation along the myelinated axon segments. See text. Compare to Byrne & Roberts, 2004 & 2009.

The same neuron can be operated in two distinct modes through electrolytic biasing. In both cases, all of the signals applied to the dendritic boutons are summed and the net sum is applied

to the noninverting input terminal of the three-terminal internal Activa. Similarly, all of the signals applied to the poditic boutons are summed and the net sum signal is is applied to the negative (signal inverting) input terminal of the three-terminal Activa. The left version shows the nominal neuron amplifying the difference between the two inputs and generating an analog output signal using an axon of less than 2 mm length (more than 95% of all neurons, **Section 2.5**). The neuron on the right is used in less than 5% of all neurons and is used where it is necessary to propagate a signal over more than 2 mm. It described in detail in **Section 2.6** & **Chapter 9**. It is biased to exhibit an electrolytic threshold and is used exclusively in stage 3A neural circuits. Below this threshold, it exhibits a relatively low amplification. When the difference between the two inputs exceeds the threshold, the amplification of the circuit becomes very high and the Activa enters a monopulse generating mode of operation. This mode of operation is used to propagate pulse signals over long distances (greater than 2 mm), at speeds an order of magnitude faster than conduction allows, based on the electromagnetic equations of Maxwell. To achieve this propagation efficiently, the axon is divided into axon segments that are myelinated. Each axon segment thereby forms a very low loss coaxial cable. Each segment is separated from its nearest neighbor by regenerating stations known as Nodes of Ranvier.

Ramachandran[6], as reproduced in Baars & Gage (2nd ed, page 66) attempts to illustrate signal projection at the elementary level using a sine wave rather than an action potential and explaining propagation over a coaxial structure by ionic charge transfer. These concepts are misleading and not in conformance with the facts (See **Section 9.1.2**). The circulating arrows are totally misleading and based on the concept of ionic conduction. In electromagnetic propagation, all of the circulating arrows are directed forward.

When not identified explicitly, dendrites and podites are both described as neurites. Since the two neuritic trees provide different capabilities, either one can be absent from a given neuron. When both are present, the neuron is frequently described as "bi-stratified."

> Earlier texts have infrequently described axosomatic synapses. These synapses in fact are associated with the internal dendroplasm or podaplasm and should be appropriately renamed either axodendritic or axopoditic synapses. They have occasionally proposed an axoaxonic synapse, but normally without supporting evidence.

The neuron shown here can be compared to that of Byrne & Roberts and used in the 2nd edition of the introductory neuroscience text by Baars & Gage (page 65). An earlier archaic but widely reproduced schematic neuron appeared in Appendix A of their 1st edition but it conflicted with the variant in the main text and was dropped from the 2nd edition.

The conceptual waveforms shown on the right of the neuron in Byrne & Roberts are not well developed to describe the real situation outlined above. They do not represent the 95% of neurons that do not generate action potentials and they do not clearly represent the other 5% of stage 3 that do. The waveforms are also foreign to the operation of the stage 3 decoding neurons so critical to the operation of the neural system. The decoding neurons (stage 3B) recover the analog information encoded earlier by the stage 3A neurons.

Another major difference from the highly conceptual neuron of Hodgkin and Huxley is in the role of the synapse. Since a two-terminal neuron (frequently described as bilateral in morphology) cannot support readily support voltage inputs of opposite phase, this function has historically been assigned to *excitatory* and *inhibitory* synapses. This notation is inappropriate for analog neurons and is unnecessary when the differential input capability of a three-terminal device is utilized. All known synapses and Nodes of Ranvier are noninverting (or excitatory).

The individual synapse, and its close relative the Node of Ranvier, are based on the same Activa used in the neuron and exhibit similar properties to the two forms of the basic neuron shown in the figure (*sans* the axon segments). The synapse is described in detail in **Section 2.4**. The Node of Ranvier is described in **Section 2.6.3**.

---

[6]Ramachandran, V. (2002) Encyclopedia of the Human Brain. San Diegeo, CA: Academic Press

2.1.2 Modeling difficulties up to the current day

The present state of mathematical and computer (numerical) modeling of neurons is unsatisfactory. All modeling found in the literature prior to 2012 has attempted to model the very early conceptual descriptions of a neuron by Hodgkin & Huxley (H&H) based on the examination of a parametrically stimulated *in-vitro* and highly mutilated neuron from a species of *Mollusca*[7,8,9]. Such modeling did not recognized the special class of the so-called giant axon of the locomotion neuron explored by Hodgkin & Huxley.

Chapter 5 of this work will review the work of H&H and the responses of the community to that work at the time. These actions of Hodgkin and Huxley have been noted by earlier writers. As Cole noted on page 476, "As to curve-fitting, the procedure and the results of Hodgkin & Huxley (1952b) are entirely unorthodox and are looked at with both amazement and admiration by trained mathematicians[10]." Messenger, et. al. have provided a discussion of the giant axon of squid[11]. The relevant figures are based on hand drawn sketches by Young dating from 1939 and 1973. Their opening quote is interesting. "Despite all the work on squid giant fibres since their rediscovery 60 years ago we still know nothing about how they innervate the mantel muscles and do not really understand how they are themselves activated. In particular we do not know the nature of the transmitters(s) at the largest synapse in the animal kingdom: the 'giant synapse' between second- and third-order fibres in the squid stellate ganglion." This is quite a statement for a book first published in 1995!

Carnevale & Hines have provided an excellent discussion on "Why model?[12]" They note, "In order to achieve the ultimate goal of understanding how nervous systems work, it will be necessary to know many different kinds of information" related to the anatomy, pharmacology, biochemistry and many related sciences. They develop the complexities involved in describing the mechanisms involved and the features of signaling and one paragraph and then go on to assert, "Hypotheses about these signals and mechanism, and how nervous system function emerges from their operation, cannot be evaluated by intuition alone, but require empirically based modeling." They use a simpler version of **Figure 2.1.2-1** to address "Just what is involved in creating a . . . model of a physical system?" There are several approaches including physical circuit modeling, analytical modeling and numerical modeling. Based on a two-terminal neuron evolving from H&H, there has not been adequate knowledge of the neuron to allow realistic physical circuit modeling. Similarly relying on the equations developed by H&H during their exploratory investigations of 60 years ago has not led to adequate analytical or computational models. Recent analytical and computational models have frequently not examined whether the equations of H&H even address the generic neuron or are only an attempt to describe a specific type of neuron. Thus the notation in the figure. It is necessary that the modeler strain to understand what is actually known about his subject and only then attempt to simplify his conceptual model (hopefully by stating a clear null hypothesis he intends to explore). Once a clear null hypothesis is established, it is important to be faithful to the Scientific Method when evaluating the physical, analytical, computational or other model of the system.

---

[7]Hodgkin, A. (1951) The ionic basis of electrical activity in nerve and muscle Biol Rev vol. 26 pp 339-409

[8]Hodgkin, A. Huxley, A. & Katz, B. (1952) Measurement of current-voltage relations in the membrane of the giant axon of *Loligo*. *J. Physiol*. vol 116, pp. 424-448

[9]Hodgkin, A. & Huxley, A. (1952) A quantitative description of membrane current and its application to conduction and excitation in nerve. *J. Physiol*. Vol 117, pp. 500-544

[10]Cole, K. (1968) Membranes, Ions and Impulses. Berkeley, CA: University of California Press

[11]Messenger, J. De Santis, A. & Ogden, D. (1995) Chemical transmission at the squid giant synapse *Chapter 19 in* Abbott, N. Williamson, R. & Maddock, L. *ed*. Cephalopod Neurobiology NY: Oxford University Press

[12]Carnevale, N. & Hines, M. (2006) The NEURON Book. NY: Cambridge Univ Press

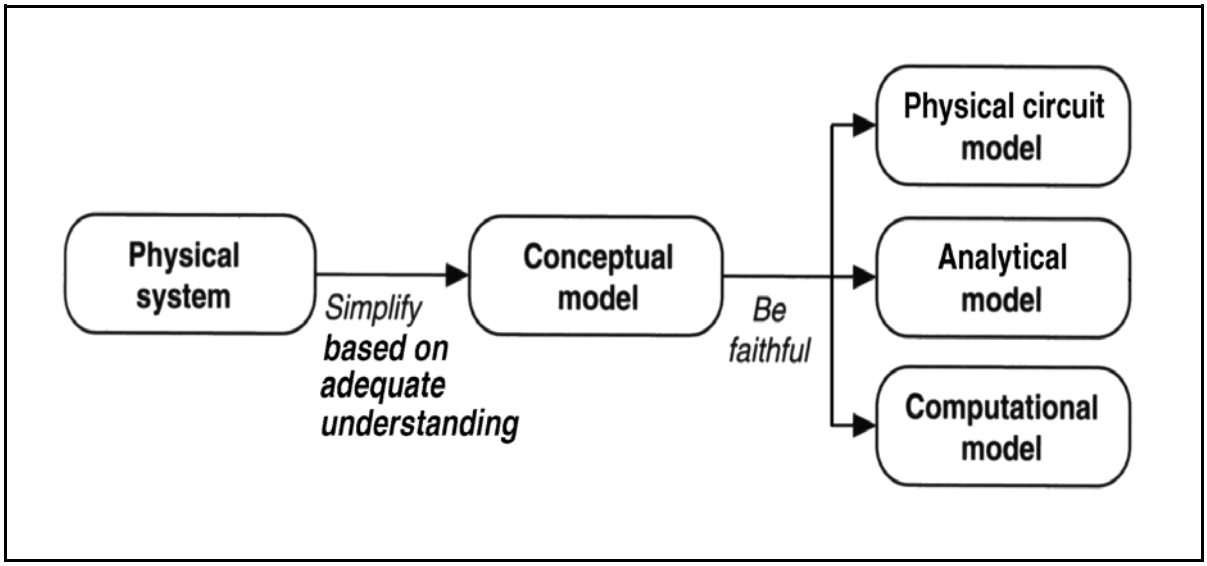

Figure 2.1.2-1 Framework for modeling the neuron. This chapter will focus on describing the detailed mechanisms of the *physical* neuron as currently known in order to develop a *series* of simplified conceptual models leading to *multiple* detailed closed-form analytical models of the neuron. See text. Expanded from Carnevale & Hines, 2006.

This chapter will focus on assembling what is known about the physical neuron after 60 years research from the time of H&H. To put this material into a suitable context, the idea of a single conceptual model will be expanded into a framework supporting several application specific models. Specifically, this work will develop both circuit models and closed form analytical models for;

- Stage 1 sensory neurons (the excitation/de-excitation and the generator potentials),
- Stage 3 signal projection neurons (the action potential) and
- any neuron subject to parametric stimulation

The chapter will then proceed to define in detail the specific characteristics and functions of these individual models. The subject of mathematical and computer modeling will be addressed in detail in **Section 2.9** after determining that closed form analytical solutions to the equations representing neuron operation are readily available.

During the 1950's, the label action potential was not clearly defined. It was frequently applied to any pulse-like response to almost any stimulation. This included the stimulation of a stage 1 signal generating neuron in response to a short pulse as well as a stage 3 Node of Ranvier regenerating a pulse designed to be identical in shape to the action potential exciting it. The former is not identified as an analog waveform describing the excitation/de-excitation mechanism intrinsic to the sensory neurons only. The latter is now identified with the encoding and regenerating pulse neurons of stage 3. These waveforms arise from substantially different mechanisms in substantially differently configured neurons.

2.1.3 Roadmap and fundamental premises developed in this chapter

Section 2.2 will present the very basics of how the electrolytic portion of the neuron is formed along with its static (*first order*) characteristics. **Section 2.3** will show how these static characteristics lead to the dynamic (*second order*) neuron. These properties represent the very core of the functional neuron that is expanded into the variety of classes of neurons described in the following sections. **Section 2.5** will address the simpler, but vastly predominant, analog neurons. **Section 2.6** will address the critically important, but less common, phasic neurons of stage 3. **Section 2.7** will address some more unique neurons found within the viscera. **Section**

2.4 will address the synapse in detail. It is critically important that the inter-neuron synapse of signaling be differentiated from the neuron to other tissue synapse. The inter-neuron synapse is totally electrolytic while the neuron to other tissue synapse can take a variety of functional forms. **Section 2.8** will present some miscellaneous but important features found within the neural system. Finally, **Section 2.8** will address the state of modeling applied to the neuron prior to this work.

A brief, but direct, restatement of the operating principles associated with the electrolytic theory of the neuron will be presented before the end of this section. The electrolytic theory is not compatible with the prior chemical theory of the neuron. **Section 2.4.1** will provide a brief recapitulation of the problems associated with the chemical theory and the virtues of the electrolytic theory (within the context of the basic neuron). Similar recapitulations will appear at the end of later sections and chapters after the presentation of more complex features of neurons. Understanding the operation of the sensory neurons discussed in **Chapter 8**, is totally dependent on the electrolytic character of the neural system.

The focus on the electrophysiological transfer characteristic, and the cytological structure of the bipolar neuron in **Section 2.5.1** will lead to a more detailed understanding of the morphology of all neurons. As usual, terminology will be refined in this and the following chapter. The anachronism associated with the fact the lateral neuron has a bipolar (electrophysiological) output signal while the (morphological) bipolar cell does not will be highlighted.

The term "functional" has been used at different levels within the biological literature. In the past, it has been used at a coarse level primarily describing the operational role of a given neuron within the anatomy of the specimen. The characteristics associated with this use of the term are frequently; where is it found, what is its shape, what other neurons does it connect to and what gross activity is it related to. These are characteristics that are associated with "traffic analysis" in the language of the cryptographer and communications specialist. They have little to do with the detailed role of the neuron within the organism and virtually nothing to do with how it functions in its signal processing role. This chapter will explore the function of the neuron in its *fundamental* role as an electrolytic amplifier. Such an amplifier can be used for purposes of signal generation, processing and transmission. The configuration and resulting operational functions of some of the more complex neurons, such as signal addition and subtraction, will be introduced beginning in **Section 2.5.** Still more advanced features, such as sensing and signal propagation, will be addressed in **Chapter 5**.

While differentiating and elaborating the membrane of a single cell, two uniquely important situations will be discussed. The first will discuss the elaboration of the cell membrane to form more than one electrolytically isolated chamber within the cell. It will then show that each of these chambers may develop a different internal potential compared with an external reference. Next, a situation will be examined where two membranes are brought into juxtaposition (**Section 2.2**). When the potentials within different plasma are appropriate and the membranes separating the plasmas are juxtaposed appropriately, a remarkable situation occurs. The configuration exhibits all of the electrical properties found in a man-made transistor. More specifically and scientifically, the configuration exhibits "transistor action." Transistor action is a quantum-mechanical mechanism encountered in semiconductors. It is defined as an active mechanism in that it can convert direct current (DC) input power (that does not vary substantially in amplitude with time) into an alternating current (AC) output signal (capable of representing information in its amplitude variation with time) at its electrical output terminal. It can accomplish this conversion under the control of an independent terminal. The fact that the resulting circuit within a neuron is a three-terminal network instead of a two-terminal network (as usually portrayed in the literature) makes a profound difference in (1) how the neuron operates and (2) how it must be portrayed.

To understand the operation of the neuron at the detailed functional level will require several paradigm shifts in the readers perspective. Justification for these changes will first appear in this chapter and reappear repeatedly and more forcefully in the following chapters. These changes allow a detailed description of the neural system unavailable under the previous conventional wisdom.

First, the arranging of multiple biological membrane in close proximity requires recognition of the fact that it is the **junctional properties shared by two lemma that are of critical importance** and not the isolated properties of an individual lemma.

The concept of "an excitable axolemma" will be abandoned.

Second, the quantum-mechanical mechanisms involved in the junctions created by multiple lemma are electronic in nature. **The active mechanisms within a neuron do not involve the flow of ions through the lemma**.

The concept of ionic flow as a means of charge transfer through a biological membrane will be abandoned.

Third, the extensive database in the literature is explicitly clear, **the primary neurotransmitter in neurology is the electron, the secondary neurotransmitter is the "hole"** of semiconductor physics. Other chemicals frequently described as neurotransmitters are in fact neuro-facilitators, neuro-inhibitors or neuro-modulators

The concept of chemical neurotransmitters *between neurons* will be abandoned. No requirement or situation has arisen suggesting the need for chemical neurotransmitters between neurons even though many specific chemicals are found in the vicinity of elements of the neural system.

Fourth, **Section 2.7** will redefine the character of the neuromuscular and neuroglandular interface to involve neuro-affectors of a chemical nature, and previously grouped among the general term neurotransmitters. This nomenclature remains consistent with the majority of the experimental data base but conflicts with a large part of the pedagogical data base that assumes all synapses are chemical in character.

Fifth, the discussion will also continue to be based on the premise that;

the fundamental <u>functional</u> unit of the neural system is NOT the neuron but the neural conduit AND the proper juxtaposition of two neural conduits to form an Activa.

The neuron is the smallest living cell associated with the neural system. However, it is not the minimal functional unit under two circumstances. As developed in **Section 2.5.3**, it can contain two individual functional units. As developed in **Chapter 9**, it is sometimes an incomplete functional unit since the myelin wrapping of the stage 3 axon conduit is generally supplied by a distinctly separate cell.

Sixth, the only conclusion that can be drawn at the end of this chapter is that **the neuron is electrically based in all aspects of its functional performance**. Chemistry only plays a minor role in the signaling function of the neural system. The major role of chemistry relates to maintaining the metabolic condition of the cell (which includes maintaining the internal bias of the cell). Based on this situation, **the electrophysiological characteristics of the neuron are more important than, and determine its morphology**. It becomes apparent that every morphological feature can be interpreted electrophysiologically.

This chapter will introduce each class of neuron found in the biological system. However, the physical and operational complexity of some of the neurons requires they be addressed in their individual chapters. **Chapter 8** will address the variety of *sensory* neurons that all exhibit a common topology but different sensory receptor mechanisms. **Chapter 9** will address the unique neurons of the signal projection stage in detail. **Chapter 16** will redefine the role of neuro-facilitators and neuro-inhibitors within neuroscience in order to bring the nomenclature associated with those materials in line with the actual operation of the neural system. **Chapter 16** will also address the neuroaffector neurons and hormones for the first time in the literature. **Chapter 20** will address the special features of the neurons and neural subsystems of the viscera.

2.2 The structural and electrical characteristics of the static (*first order*) neuron

The neuron and the neural system are very special in that their electrical performance is determined by the repetitive use of a single circuit group. At the heart of this group is an electrical conduit formed by the enclosure of an electrically conductive electrolyte within an insulator formed of a BLM that is itself surrounded by an electrolyte. Morphologically, the result is a series of conduits connecting a source of information to a consumer of that information. Each of these conduits exhibit a variety of surface characteristics associated with their chemical composition at the molecular level. Chemically, the result is a series of regions formed of bilayers of various phospholipid molecules. Electrically, the result is a set of circuit elements representative of the electrical characteristics of each region of the membrane. These sets of circuit elements form the electrical barriers between the various plasmas inside and outside the cell. **With one crucial exception to be discussed below**, the values of the circuit elements of a given region are fixed. No variable elements controlled by external or unspecified forces are involved.

The crucial exception involves the following fact. Under conditions where the cathodes of two semiconductor diodes are formed on a common crystalline substrate, the two diodes can exhibit "transistor action." Transistor action causes a current to flow in the second diode under the control of the current through the first diode. It does this in spite of the second diode being reverse biased. This activity will be introduced in **Section 2.2.2** and be explored extensively in **Section 2.3**.

The operation of the fundamental neuron is best understood by proceeding to examine a generic biological cell before it becomes a neuron. This will be done in steps. In the following sections, three degrees of complexity will be explored. Initially, only the fundamental cell membrane will be examined. A basic, or ***first order***, fundamental cell will then be examined as an operating entity without regard to the physical arrangement providing electrical bias to the circuit. Finally, a ***second order*** fundamental cell will be considered as a complete operational entity. This second order cell consists of multiple individual membrane isolated conduits within a single external membrane. The surface of the membrane surrounding each of these compartments is usually differentiated into regions at the molecular level. At this point, the importance of the electrolytic and metabolic matrix surrounding the cell is found to be critically important to its static characteristics. *In-vitro* experiments must observe these requirements placed on the surrounding interneural matrix if the results are to be meaningful.

2.2.1 The fundamental cell membrane

Danielli has provided a brief overview of the evolution of the bilayer hypothesis of membrane structure[13]. It is based on his long involvement in the field, includes many of the early caricatures of cell walls, and stresses the conceptual nature of these early ideas.

Steed & Atwood have provided the clearest caricature, **Figure 2.2.1-1**, of how amphiphilic molecules self-organize into one of several configurations[14]. However, two conditions need to be noted. First, the vesicle is shown with alternating molecular alignments between inner and outer films. The figure employs an "artist's license." At the actual scale of the vesicle versus the individual molecules, the alignment between the molecules of inner and outer films exhibits a one-to-one alignment. Second, the fluid background should appear outside of all of the molecular structures shown, and inside the vesicle, but should not appear between the inner and outer polar elements of the vesicle wall, or between the polar elements of the bilayer. The monolayer shown at the fluid/air interface is an important configuration used to measure the dipole potential of an amphiphilic film (**Section 2.2.1.4**).

---

[13]Danielli, J. (1975) The bilayer hypothesis of membrane structure. *In* Weissmann, G. & Claiborne, R. *ed.* Cell Membranes; Biochemistry, Cell Biology & Pathology. NY: HP Publishing Co. Chapter 1

[14]Steed, J. & Atwood, J. (2000) Supramolecular Chemistry. NY: Wiley

The fundamental cell membrane is defined here as a bilayer lipid membrane (BLM) where each layer is a continuous liquid crystalline film of phospholipid material. The BLM is nominally 75 ± 15 Angstrom in thickness. There are no inclusions within the BLM and no disruption of either film above the molecular level.

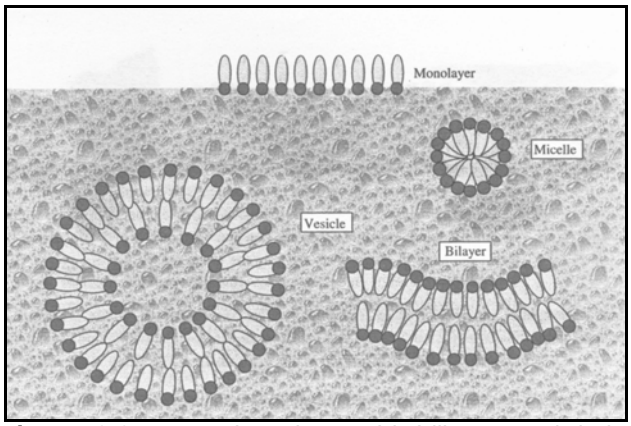

Figure 2.2.1-1 Ordered amphiphilic materials in aqueous solution. The monolayer extends into the gaseous space above the fluid. The solvent should not be shown between the polar heads on each side of the bilayer. See text. Modified from Steed & Atwood, 2000.

From an electro-chemical perspective, a BLM is a surface of finite thickness composed of a highly structured material exhibiting a characteristic electrical impedance and a characteristic voltage potential between its two surfaces. The electrical equivalent circuit of the BLM may contain both a variable resistive component (characteristic of a diode) and a battery in series with the combination shunted by a capacitive component. These properties are directly related to the molecular structure, the thickness, the temperature, and to other properties of the membrane to be defined below. These electrical properties are independent of the properties of any more complex regions of a membrane separating two electrolytes that are used for genesis or metastasis.

Both the intrinsic voltage of the internal battery and the impedance of the BLM are highly dependent on the degree of symmetry between the two bilayers of the membrane. For a symmetrical membrane, the impedance is exceedingly high and the material acts as an insulator. For more asymmetrical arrangements, the impedance per unit surface area is also asymmetrical. It can be defined by the reverse cutoff current of the diode. For these asymmetrical BLMs, the intrinsic voltage of the battery is usually in the range of 0.00 +/– 50 mV.

The properties of the phospholipids found in neural lemmas (**Section 1.4.2**) suggest the electrical nature of the conduits defined above. The highly structured nature of the phospholipids in the membrane supports the assertion that the materials are in the form of a "liquid crystal" when at biological temperatures. The polar groups of the phospholipids are structurally complex and contain a large amount of oxygen. These characteristics suggest the electrical properties of the liquid crystalline layers may be quite complex and the structural arrangements may support unusual stereographic associations with other molecules. These possibilities will be found important in the discussion to follow.

There have been many caricatures of the fundamental membrane. Pannese discusses the history of this research[15]. Discounting his comments concerning excitability of the membrane, he points out that "The study of neuronal plasma membrane is beset with particular problems." He also points out that most of the common wisdom concerning neural membranes has been obtained by inference from data on non-neural cells and by inference from experiments prior to the development of the electron microscope. Most of the resulting caricatures, including those of Danielli & Davson (1935) and of Robertson (1959) assemble the various constituents known to be associated with a membrane into a single structure. In the above two cases, protein "skins" are shown on each side of the bilayer. Although such protein layers are undoubtedly present in some situations, and may be key to the electrostenolytic support to the operation of the neuron, they are not believed to be intrinsic to the membrane.

There has been no way for the above investigators to know when they were dealing with a

[15]Pannese, E. (1994) Neurocytology. NY: Thieme Medical Pulbishers. Pg. 74

fundamental membrane or a highly differentiated segment of neural membrane. Pannese also addresses this problem due to the fact that a neural membrane does not show uniform properties over its whole surface.

There have only been a few attempts to create a synthetic BLM **(Section 1.4.2**). The attempts have generally sought to create a BLM where the two layers were symmetrical. The result has generally produced high quality electrical insulators. While these have been descriptive of the bulk of the BLM's in neurons, they have not described the functionally critical type 2 membrane of the neuron. More experiments are needed based on this theory to quantify the characteristics of type 2 membranes.

2.2.1.1 Local (cytological) uniformity of the neuron membranes.

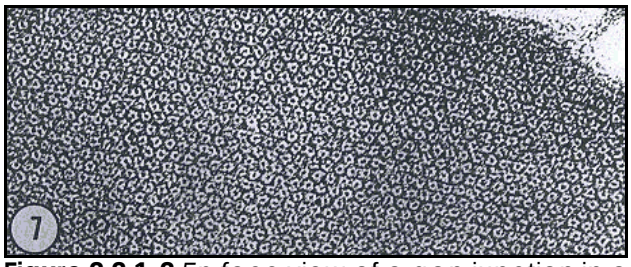

Figure 2.2.1-2 *En face* view of a gap junction in a neuron found in the liver of a rat. Negative stain was used. The central region of each "particle" is penetrated by the stain to produce a 15-20 Angstrom electron dense spot. Lattice spacing is approximately 80-85 Angstrom. From Gilula (1975)

Many authors invoke caricatures of neural membranes containing a variety of inclusions and/or voids in the membranes. The voids are frequently described as gates for the passage of (simple or complex) ions through the membrane under controlled or controllable conditions. Proposals for such gates are especially common when describing the synaptic region between two neurons. Some authors become quite fanciful and indicate a separate void (gate) for each ion participating in the proposed process along with a wide variety of other inclusions in the membrane surface. These caricatures are usually proposed based on interpretations of electron micrographs made at around 50,000x. Shepherd reviews a number of these concepts[16].

The description of the membrane face as containing a large number of "gates" seems highly unlikely since a great many different tailored holes would be needed per unit surface. **Figure 2.2.1-2** from Gilula[17], supports this position. It shows an *en face* view of a gap junction at 360,000x. There are no signs of either inclusions or physical holes in the area shown (about 6000 x 3000 Angstrom or 0.6 x 0.3 microns). On the contrary, the uniformity of the para-crystalline lattice strongly supports the idea that the cell wall is a continuous liquid crystalline structure devoid of gates. The staining of the individual phospholipid end groups is not unexpected based on their complex molecular structure.

At the molecular scale, the change of molecular species within one or both bilayers with position along the surface of the BLM is well accepted. This may be represented in the upper right corner of the figure. Although such changes would not support a major change in the permeability of the membrane to large particles and ions, it can have a significant impact on the permeability of the membrane to fundamental electrical charges.

2.2.1.2 Molecular level uniformity of the fundamental membrane

As explored earlier, the fundamental membrane is typically subdivided into a series of application oriented regions. These regions of material differ primarily at the molecular level. **Section 1.4.2** has introduced the molecular characteristics of these regions. Their electronic properties have yet to be codified completely. However, Seanor has discussed their properties

---

[16]Shepherd, G. (1991) Foundations of Neuron Doctrine. Pg. 277

[17]Gilula, N. (1975) Junctional membrane structure. in The Nervous System, Tower, D. ed. vol. 1, The basic neurosciences. NY: Raven Press pg. 6

generically[18]. He addresses the self-assembly of supramolecules of fatty acids, such as the phospholypids, into micelles and membranes. These materials can exhibit either n-type or p-type performance. Wikipedia[19] (as of December 2015) listed more recent publications relating to the properties of these materials with a focus on the polythiophenes (Pts). The PTs are currently of great interest in the electronic display area for consumer television sets.

> A number of comprehensive reviews have been published on PTs, the earliest dating from 1981.[1] Schopf and Koßmehl published a comprehensive review of the literature published between 1990 and 1994.[2] Roncali surveyed electrochemical synthesis in 1992,[3] and the electronic properties of substituted PTs in 1997.[4] McCullough's 1998 review focussed on chemical synthesis of conducting PTs.[5] A general review of conjugated polymers from the 1990s was conducted by Reddinger and Reynolds in 1999.[6] Finally, Swager et al. examined conjugated-polymer-based chemical sensors in 2000.[7] These reviews are an excellent guide to the highlights of the primary PT literature from the last two decades.

2.2.1.3 Charge transfer through the bilayer membrane– by "holes"

The question of charge transfer through the lemma of a neuron has not been addressed in a concerted manner in the biological literature. The concept of charge transfer has remained within the pedagogy of solution chemistry. Treating the lemma as a liquid-crystalline structure with the electrical properties of a crystalline material has yet to become common. The problem is exemplified by the statements of Gennis when discussing the permeability of lipid bilayer membranes as recently as 1989. "Experimentally, it is not possible to distinguish proton permeability from hydroxide permeability, so this is usually indicated as (H^+/OH^-). We will refer to this simply as proton permeability." After introducing the subject of the permeability of membranes to small ions, he notes, "Nevertheless, it is clear that proton permeability is at least 10^6 greater than for other simple ions." He cites Gutknecht as a reference[20]. Gutknecht begins a mini-review with the statement, "The proton/hydroxide (H^+/OH^-) permeability of phospholipid bilayer membranes at neutral pH is at least five orders of magnitude higher than the alkali or halide ion permeability, but the mechanism(s) of H^+/OH^- transport are unknown." He reiterates this in his opening paragraph, "During the past six years, about twenty laboratories have studied the H^+/OH^- transport properties of phospholipid bilayers. In general, the original observations of Nichols and Deamer have been confirmed. However, the mechanism(s) of H^+/OH^- permeability remain unknown." If Figure 2 of Gutknecht is modified to incorporate the hole/electron concept described below, reinterpretation of his data becomes very valuable. Writing in the same journal, Deamer also presented a much longer mini-review. Unfortunately, he plows the same ground. "Proton permeation of the lipid bilayer barrier has two unique features. First, permeability coefficients measured at neutral pH ranges are six to seven orders of magnitude greater than expected from knowledge of other monovalent cations. Second, proton conductance across planar lipid bilayers varies at most by a factor of 10 when pH is varied from near 1 to near 11. Two mechanisms have been proposed to account for this anomalous behavior: proton conductance related to contaminants of lipid bilayers, and proton translocation along transient hydrogen-bonded chains (tHBC) of associated water molecules in the membrane." He concludes his work with, "Although these results are suggestive that trace contaminants may contribute to proton conductance in planar lipid membranes, they do not provide a complete explanation of the proton permeability anomaly." The Agmon team[21] has pursued the physical movement of positive nuclei through the aqueous environment in recent

---

[18]Seanor, D. (1982) Electrical properties of polymers. NY: Academic Press

[19]https://en.wikipedia.org/wiki/Polythiophene

[20]Gutknecht, J. (1987) Proton conductance through phospholipid bilayers: Water, wires or weak acids? *J Bioenerg Biomemb* vol 19(5), pp 427-442

[21]Markovitch, Omer; et al. (2008). Special Pair Dance and Partner Selection: Elementary Steps in Proton Transport in Liquid Water. *J. Phys. Chem*. B 112 (31): 9456–9466

times without clear success (**Section 1.3.2.2**). They define it as the Grotthuss mechanism honoring a German of the early 19th Century who speculated on the movement of positive hydrogen ions before the formula for water was known. They focus on the grouping of liquid water molecules into multiple shell complexes.

The problem is the limited perspective of the cited investigators. They are unaware that the currents moving through liquid-crystalline lipid bilayer membranes are subject to the laws of quantum physics and not electrolysis of solutions. The currents in liquid crystalline membranes consist primarily of electrons and the absence of electrons (holes). No protons transit the typical membrane any faster than their sibling ions. The movement of positive charge through a membrane is accounted for by the concept of hole transport. Hole transport involves the lack of an electron at a given atomic site in a liquid-crystalline or solid crystalline lattice and the replacement of this lack by another electron from an adjacent lattice location in accordance with the electrical field present. The result is the apparent slow motion of a positive charge across the lattice within the ground electrical state of the material. Simultaneously, a much faster electron transport can occur within the valence band of the material in accordance with the same electrical field and the impedance of the valence band. These two currents are easily separated using the Hall Effect. The result is typically a hole transport velocity that is many orders of magnitude lower than that of the electron current. This hole current is, however, many orders of magnitude (10^6 as noted by Gennis) greater than any physical transport of ions (including protons) through the membrane. Table 7.1 of Gennis should be corrected by changing the "compound" label under item 8 to read, "Hole current" in Egg Phosphatidylcholine. As noted above, the fact that this was a hole current can be confirmed by Hall Effect measurements.

Dowben described the motion of "holes" in water conceptually, using the language of chemistry, in 1969[22] as did Lehninger in 1970. Lehninger[23] noted the mobility of the charge associated with the water lattice (semi-metallic water) is stable up to 100 centigrade and six times the mobility of either sodium or potassium ions.

The above currents are independent of any pores, channels or other voids in the overall lipid membranes of neural cells. These currents can be even larger when the lipid bilayers are tailored to specific purposes, as in type 4 lemma (**Section 2.2.1**).

In 2015, the question of conductivity through biological lemma was becoming a subject of greater interest. The work of Geim & Novoselov[24] relating to a single layer film of carbon atoms in a film labeled graphene exhibits a structure similar to the cross-section of a phospholipid film forming the exterior bilayer of a neural lemma. They note a single layer of graphene can conduct what they describe as protons. However, they note the cloud-like swarm of unbound electrons surrounding the monolayer of carbon atoms in a hexagonal honeycomb array. Neto, et al. developed these properties in greater detail[25].

A conceptual challenge for the reader unfamiliar with the hole/electron concept is the fact that the neural system is built using *pnp* type electrolytic devices. The hole currents are the dominant currents in such devices, as opposed to electron currents. Thus, the hole current can be associated directly with the previously presumed H^+ current through a membrane. However, no physical ions pass through the membrane. Only holes (in fact electrons in the ground state and in the opposite direction to the electrical field) pass through the membrane.

2.2.1.3.1 The long chain molecules of the lemma as nematics

The long nominally electrically neutral tails of the molecules forming the inner and outer layers

---

[22]Dowben, R.(1969) General Physiology: a molecular approach. NY: Harper & Row

[23]Lehninger, A. (1970) Biochemistry. NY: Worth Publishing pp 39-44

[24]Geim, A. & Novoselov, K. (2007) http://arxiv.org/ftp/cond-mat/papers/0702/0702595.pdf

[25]Neto, A. Guinea, F. Peres, N. Novoselov, K. & Geim, A. (2009) The electronic properties of graphene *Rev Mod Phys* vol 81(109) http://journals.aps.org/rmp/abstract/10.1103/RevModPhys.81.109

of the neural lemma are liquid crystalline, they are nematic in structure. The potential movement of charge along these structures has not been extensively studied.

Turiv et al. have provided a generic discussion of spherical entities along nematic molecules[26]. Their conclusion, "Our work demonstrates that the orientational order in a nematic liquid crystal causes a profound effect on Brownian motion of a small spherical particle and results in anisotropic subdiffusion and superdiffusion." Extension of their work to charged particles in an electrically biased regime will require further study.

2.2.1.3.2 The Nobel Prize in Chemistry for 2000–semi-conductive lipids

A critical element in understanding the operation of neurons, and particularly the sensory neurons involves the transport of electrical charges (not ions, like sodium calcium or potassium) through the lemma of a neuron.

The documentation of this capability was presented during the last decade of the 20th Century by three research scientists[27]. The cited paper provides a significant bibliography relavent to polymer conductivity. . **Figure 2.2.1-3** illustrates the range of conductivities achieved in doped conjugates carbon chains. This range has been exploited in the development of man-made organic light emitting diodes and other applications in flat screen imaging devices. It is also key to the operation of the semiconducting lemma of neurons that is presented below.

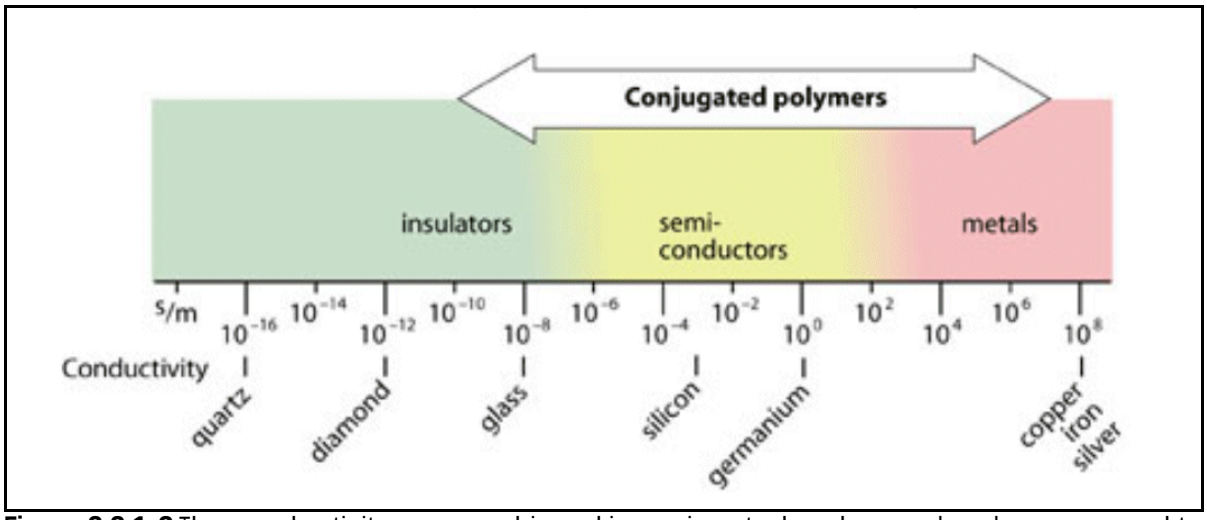

Figure 2.2.1-3 The conductivity range achieved in conjugated carbon molecules compared to that of solid state materials. The range is clearly as broad as that used in solid state semiconductor devices. See text. From Heeger, MacDiarmid, A. & Shirakawa, 2000.

In the neurons, the conjugated carbon chains are commonly found in small areas of the external lemma of neurons and in internal areas of the lemma separating the fluid chambers of the neuron (**Section 2.2.2.6**). These areas are described as type 2 membranes in the following sections. These areas will be described further in **Section xxx**.

---

[26]Turiv, T.Lazo, I. Brodin, A. et al. (2013) Effect of Collective Molecular Reorientations on Brownian Motion of Colloids in Nematic Liquid Crystal *Science* 342, 1351-1353

[27]Heeger, A. MacDiarmid, A. & Shirakawa, H. (2000) Conductive polymers. Nobel Prize Lecture http://www.nobelprize.org/nobel_prizes/chemistry/laureates/2000/advanced-chemistryprize2000.pdf

2.2.1.4 The dipole potential of the biological bilayer membrane (BLM)

When addressing the chemoreceptor modalities of the neural system, it will be appropriate to address another quantum mechanical concept, the dipole potential of a highly polar phospholipid molecule forming specialized regions of neural lemma (type 4 lemma). The dipole potential of each layer of a bilayer exhibits a dipole potential in the 250 to 600 mV range, although since the two layers are arranged back to back, the potential across the membrane is nearly zero. However, the potential of the interstitial space between the bilayers can be substantial and is subject to the transduction mechanisms of sensory operation (**Sections 8.5** & **8.6**). Gennis has provided considerable data and several citations relative to the dipole potential and surface potential of type 4 lemma[28].

2.2.2 Development of the functional structure of the neuron

A brief discussion of cell evolution and differentiation will appear first in this section to aid in orienting the reader. The section will then develop the structural features of a neuron that are directly related to signaling. This will provide the groundwork for the next section that will discuss the paradigm shift necessary on this more detailed understanding of the neural system.

2.2.2.1 Evolutionary path from stem-cell to neuron

Figure 2.2.2-1 provides a roadmap for the differentiation of a proto-cell (stem-cell) into one of a variety of neurons. A stem cell can differentiate into one of at least four different cell families. The family of most interest here is the neuro-secretory family, B. This family is primarily involved in signaling within the organism but does support exocrine signaling. It can readily be divided into three major subfamilies depending on how signaling is accomplished. The first is any form of signaling not involving the neural system (and assumed to be chemically-based). The second is the conventional neuron-to-neuron signaling. It will be shown this method involves only electrons and their counterpart, "holes." The third is the large class of neuron to non-neuron signaling that encompasses both the paracrine situation, the conventional hormonal system consisting of endocrine and pericrine situations and the exocrine situation. It will be shown the pericrine and endocrine situations involve neuro-hormonal agents that can be classed as neuromodulators. These neuromodulators affect a wide variety of cell types, not just neurons. The pericrine situation will be introduced in **Section 2.7.2**.

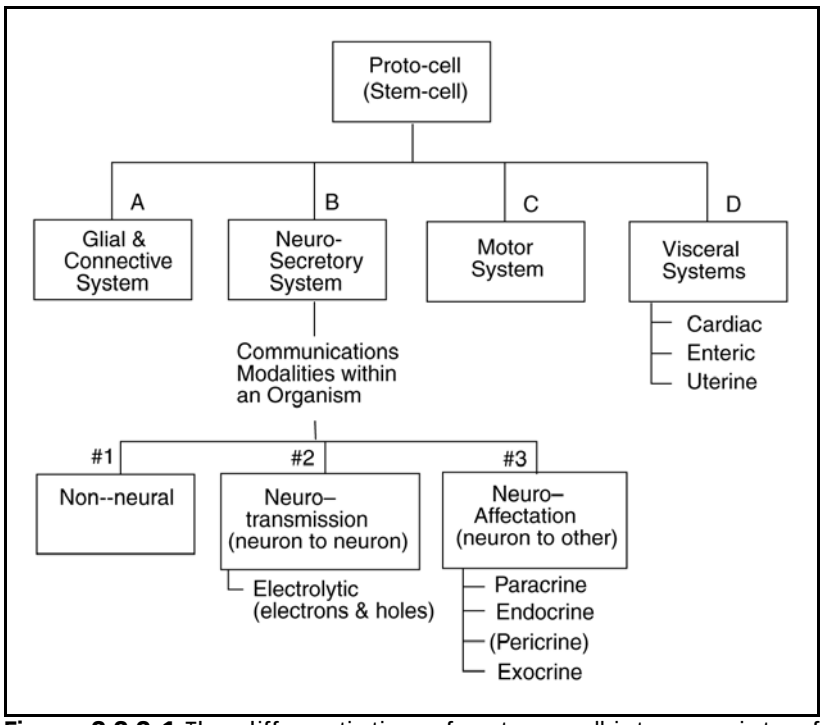

Figure 2.2.2-1 The differentiation of a stem-cell into a variety of neurons. Other cell types are shown for orientation and discussion purposes. See text.

The biological community has defined communications within the organism very broadly. It is critically important that this term be clearly defined in

[28]Gennis, R. (1989) Biomembranes. NY: Springer-Verlag Chap 7

this work.

Signaling in the broad biological sense will be addressed first. Signaling can be considered any mechanism by which two cells communicate their mutual location, or their intent, in order to support morphogenesis beyond that related to the genetic code. This signaling occurs within a single organism. At this level, the mechanisms of signaling are not well understood but are assume to involve chemical agents. The implementation of neural paths along a nerve or as the nerve extends would appear to involve this type of signaling.

Signaling of a more time sensitive character, supporting a wide range of bodily activity and involving signal transmission speeds at rates on the order of one meter per second or less can be accomplished by conductive flow via the vascular or lymphatic (ducted) systems of the body. This is the domain dominated by the endocrine system.

Signaling of a time critical character and involving signal transmission speeds at rates on the order of four meters/second or faster can only be accomplished within the neural system itself. This mode of transmission is dependent on the speeds achievable by electronic propagation (not chemical means). The capability of the neural system implemented to satisfy this high signaling rate requirement is so useful, it has been expanded into a much more capable neural system. This capability was implemented using groups (knots) of neurons to perform more complex signal manipulation. This expanded capability eventually evolved into major neural centers containing many knots of neurons. These became known as brains.

Simultaneous with the development of neural signal manipulation was the development of dedicated modalities of sensing both the internal and external environments of the organism.

With this rise in neural signaling capability, an additional neuro-chemical signaling mechanism was introduced that has come to be known as the exocrine system. The exocrine system, in conjunction with the olfactory system has resulted in the pheromone system of inter-organism communications within a species.

Spaargaren, et. al. explored the subject of biological communications recently from the conventional perspective[29]. They did not recognize the existence of electrolytic signaling throughout the neural system nor the mechanisms used within neurons to achieve very high signal transmission speeds.
Their introduction defines the scope of their discussion. "Optimal functioning of an organism is only possible if the individual cells that make up the different tissues and organs are able to communicate with one another in order to coordinate their growth, division, development, differentiation, and organization." Thus, their work focuses on the non-neural signaling (#1) in the above figure. Their discussions of all three areas of communications within an organism remained primarily conceptual at that time and can be considered largely archaic at this time. It will be shown that the classical neurotransmitters of 20th Century biology (prior to 1995) are not related to signaling within the neural system. They play a significantly different role.

This work will develop the primary role of the neural system as the source of the initial hormones of the hormonal system (**Chapter 16**).

2.2.2.2 Local view of neuron formation from a stem-cell

Figure 2.2.2-2 provides a caricature of the development of a functional neuron from a simple cell, a neurogen. In the current vernacular, the neurogen is called, or is derived from, a stem-cell. The process is straight forward but sophisticated. The metabolic and growth aspects of the cell will not be addressed here.

In order to provide a foundation for the following paragraphs, it is useful to define a reference

---

[29]Spaargaren, M. Delaat, S. & Boonstra, J. (1993) General mechanistic patterns of signal transduction across membranes, *Chapter 1 in* Shinitzky, M. *ed*. Biomembranes: Signal Transduction Across Membranes. NY: Balaban Publishers

situation which will be called a fundamental cell: i. e. a living organism consisting of a continuous, single outer membrane enclosing a variety of cytological elements. The outer membrane is more commonly called the plasma membrane, and is recognized to be a bilayer consisting of two leaflets as described earlier. This situation is represented in frame (**A**). The majority of the plasma membrane is of type 1 lemma. The outer membrane necessarily contains a site of type 3 lemma for exchanging materials between the interior of the cell and the surrounding electrolytic matrix and potentially contains a type 3 lemma acting as a secretory site. Sensory neurons, those originating afferent neural signals generally contain secretory sites. Similarly, a variety of neurons terminating efferent paths are characterized by their secretory capability. A nucleus is shown at an arbitrary location in each frame of the figure for completeness; it plays no role in neural signaling.

From an electrochemical perspective, the fundamental cell is a region enclosed by a plasma membrane. The inside of the cell is filled with a heterogeneous electrolyte of finite conductivity. The cell is surrounded by an electrolyte of finite conductivity containing bioenergetic materials capable of supporting a glutamate cycle as part of an electrostenolytic process (Chapter 3). Both of these electrolytes may be more completely described as to their viscosity and ionic content. The electrolyte within the cell is generally gelatinous and may be in a true liquid crystalline form. The external matrix may also be gelatinous or a liquid crystalline material.

Somewhere on the surface of the membrane is an area of type 2 membrane supporting an electrostenolytic process, E.S. (indicated by the rectangular bar at the bottom of the cell in frame (**A**). Because of this electrostenolytic activity, the cytoplasm of the cell exhibits a negative electrical potential with respect to the external electrolyte under quiescent conditions. Little or no energy is required to maintain this quiescent condition because *a majority of the plasma membrane is an electrical insulator and impervious to the flow of both ionized atoms and fundamental electrical charges.*

As the neurogen evolves into more specialized forms, a variety of internal membranes may be formed within the cell and multiple electrostenolytic sites may be formed on the surface of the cell.

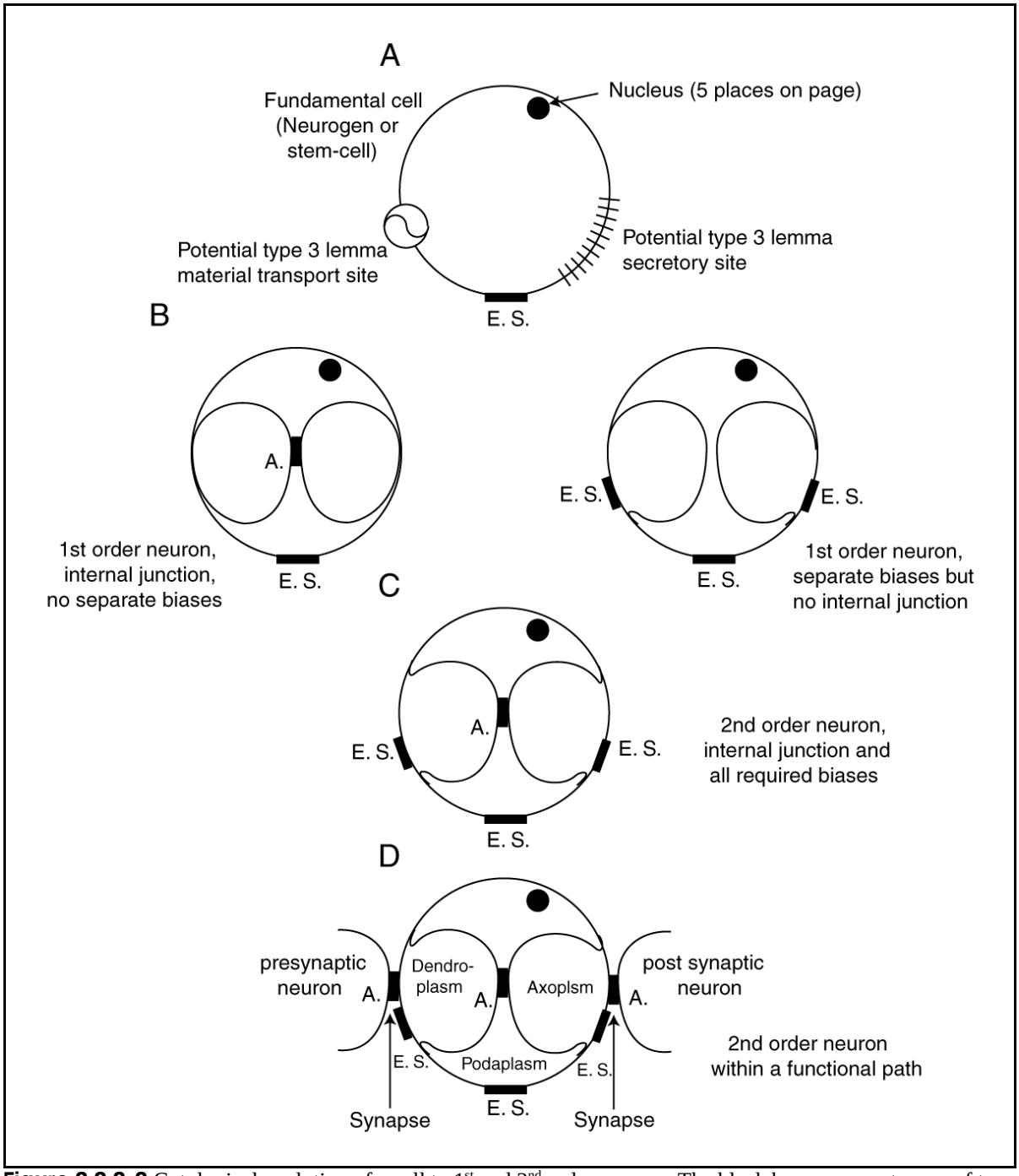

Figure 2.2.2-2 Cytological evolution of a cell to 1st and 2nd order neuron. The black bars represent areas of type 2 lemma. (**A**), a simple cell or neurogen, a stem-cell in the current vernacular. The nucleus, a potential secretory site and a potential material transfer mechanism are shown. A nucleus is shown at an arbitrary location, it plays no role in neural signaling. (**B**), two variants of the 1st order neuron. (**C**), a second order neuron. (**D**), a fully functional neuron within a neural signaling path. See text.

2.2.2.3 The *first order* neuron, non-functional

Frame (**B**) illustrates the 1st order neuron at two separate stages of development. There is no data to define which occurs first. On the left, the cell is seen to have formed three separate plasma enclosures through the development of interior membranes connected to the plasma membrane by lap joints. At the center of the cell, the two interior membranes have become juxtaposed so as to form a potential Activa (shown by the vertical black bar). However, all of the plasmas remain at essentially the same electrical potential. On the right, an alternate first step is shown where the cell has formed the same three separate plasma enclosures through the development of the same lap joints. It has then proceeded to create two more areas of specialized plasma membrane supporting additional electrostenolytic activity. The three plasmas are now capable of sustaining different electrical potentials depending on the precise nature of the electrostenolytic activity at each site on the surface of the plasma membrane. However, no electrically active junction has formed within the cell.

2.2.2.3.1 Examples of lap joints & electrostenolytic mechanisms

It is important to establish two features of a neuron before proceeding. Eckert[30], in 1988, said "Membranes are never seen to terminate with free ends; they always form enclosed compartments." While a useful pedagogical concept, there is some question about this statement based on **Figure 2.2.2-3** at a magnification of 204,000x taken from the work of Gilula[31] and the work of many others. Although drawing conclusions about three-dimensional structures from two-dimensional images is always dangerous, it would appear that Eckert's statement should be broadened to at least allow for lap joints between membranes. Because of the bi-leaf structure of individual membranes, it appears that individual membranes cannot end by tapering away to zero thickness. They can and in fact do end abruptly. Thus, lap joints may be used to form tight junctions. After forming a tight junction, the membrane may end abruptly. This would insure that there is no communication by diffusion among the three electrolytic chambers involved in a typical structural junction.

In the left of **Figure 2.2.2-3**, there is a piece of membrane which appears to be of finite length, to end abruptly on each end and to be sandwiched in between two separate membranes. Many other examples of abrupt membrane terminations are seen in the figure.

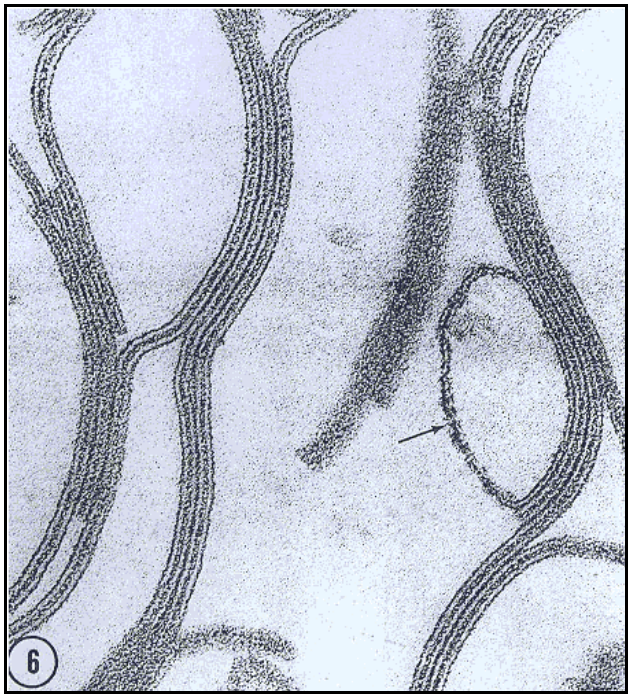

Figure 2.2.2-3 Subcellular fraction of gap junctions isolated from rat liver. (204,000X) See text. From Gilula (1975).

On the right of this figure, there is another interesting example. A membrane is shown forming a complete loop. Although the original caption by Gulila, speaks of this non-junctional membrane as contaminating the fraction; this author would take a different view. Specifically, the loop forms a separate conduit that extends out of the plane of the figure. The out-of-plane portion of this conduit can include a wide variety of functional elements. These elements can change the potential of the plasma inside the conduit relative to other plasmas, connect with other neurons through a gap junction etc. It is interesting to note the preponderance of three membrane sandwiches in this figure. It is also interesting to note the significant defocusing of the image of the membrane in the center of the figure and at lower left. This defocusing may be due the membranes departing from the focal plane of the microscope. However, this is unlikely due to the depth of focus of electron microscopes and the apparent perpendicularity of the membrane to the focal plane. An alternate suggestion is that these "fuzzy" areas are sites of charge accumulation and are involved in some form of electrostenolytic process (**Chapter 3**). The focus of Electron microscopes is easily disrupted by electrical charge present in the focal plane. Thus, a revised caption for the orginal figure might read: "Arrow points to an area of membrane separating two plasmas and actively involved in the electrical circuitry of the cell."

---

[30]Eckert, R.(1988) Animal Physiology. 3rd ed. NY: W. H. Freeman pg. 65

[31]Gilula, N. (1975) Junctional membrane structure *In* Tower, D. ed. The Nervous System NY: Raven Press figure 6

Electron microscopy invariably shows that the bilayer of a membrane is about 75 ±15 Angstrom thick. When combined into a bilayer, the membrane is typically 160 Angstrom thick and appears as two distinct dark lines separated by a space appearing lighter. This sandwich is usually defined as consisting of two phosphoglyceride layers, the hydrophobic tail of the two layers facing each other (the light area) and the two hydrophilic heads facing outward (the two dark areas).The practical width of the membrane may be wider than the above value due to the specific structures associated with the hydrophilic heads. By reversing the contrast of the microscope imagery, as in the above figure, the outer edges of the membrane, sometimes described as the Helmholtz regions, are better illustrated. Frequently, the sandwich is not symmetrical. The head group facing "outward" in a cell wall is normally *mostly* choline related (typically phosphatidyl choline or PC) and the head group facing "inward" is composed *mostly* of ethanolamine related ligands (typically phosphatidyl ethanolamine or PE). In the case of stage 2 lemma, the head of the outward facing phospholipid is more complicated chemically and acts as a chemical receptor in a variety of stereochemical situations.

2.2.2.4 The configuration of the fully functional *second order* neuron

(**C**) in the above figure shows the cell continuing to evolve. It now exhibits three separate internal plasmas, each of which exhibits a different electrical potential compared to the surrounding electrolyte due to the electrostenolytic sources present. There is a fully formed Activa at the juxtaposition of the left and right-hand internal membranes. The cell remains in overall electrochemical equilibrium. However, the Activa is fully functional and it influences the potential between the various plasmas. The relationships between the potentials of these plasmas will be discussed further in **Section 2.3** following the development of additional background material. Synapses are also shown between the left and right plasmas and the presynaptic and post synaptic neurons.

2.2.2.5 Preview of the fully functional neuron in a neural signal path

(**D**) shows the fully functional neuron interfaced with two adjacent cells to form a continuous neural signal path. These intefaces, or synapses, also include Activas and are represented by the two vertical black bars. If the electrostenolytic processes have provided the correct biases to the internal Activa and a charge is injected into the dendroplasm of the neuron from the axoplasm of the neuron shown in partial view on the left, the Activa will cause a charge to appear in its axoplasm. This charge will change the potential of the axoplasm. A change in this potential will cause charge to be transferred to the dendroplasm of the neuron shown in partial view on the right via the synapse shown. Thus, signaling will have been achieved. This signaling is inherently analog in character.

2.2.2.6 Fully elaborated schematics of fundamental neurons

Recent texts on neuroscience and neurology have not discussed the detailed schematics of neurons. Previous texts have relied upon schematics of common cells to describe neurons. This reliance has constrained understanding of the fully elaborated neuron. This section provides an overview of the fully elaborated neuron prior to providing all of the data substantiating the model. This additional material will be provided within the following sections of this volume.

2.2.2.6.1 Examples of lap joints & electrostenolytic mechanisms

Cantarow & Shephartz provided a detailed schematic of a prototype cell in 1967[32]. **Figure 2.2.2-4** extends their schematic to include the additional functions associated with a neuron (a neuro-secretory cell). The central portion of the figure is similar to the Cantarow & Shephartz cell, with some of their detail omitted. The left-most portion adds the unique neural functions found in all neurons. The right-most portion adds the unique secretory functions. Both the neural and secretory portions are found in nearly all sensory neurons and are critical to the operation of the digestive system. However, the sensory neurons are more complex and are discussed initially in **Chapter 8**.

The bilayer form of BLM's was discussed in the previous section. This figure highlights the lap junctions necessitated by this form. This form requires all junctions between membranes consist of lap joints (as shown along the top edge of the figure only to save space). The outer perimeter of the neuron is defined as the plasmalemma, even though parts of it may be formed of axolemma, dendrolemma, etc.

The neural portion consists of three distinguishable chambers (conduits) that will be described in detail in the following sections. Note the narrow region of the podite conduit containing podaplasm and separating the dendrite and axon conduits. The secretory portion may or may not be a separate chamber, independent of the soma.

[32]Cantarow, A. & Schepartz, B. (1967) Biochemistry, 4th Ed. London: W. B. Saunders. pg 2

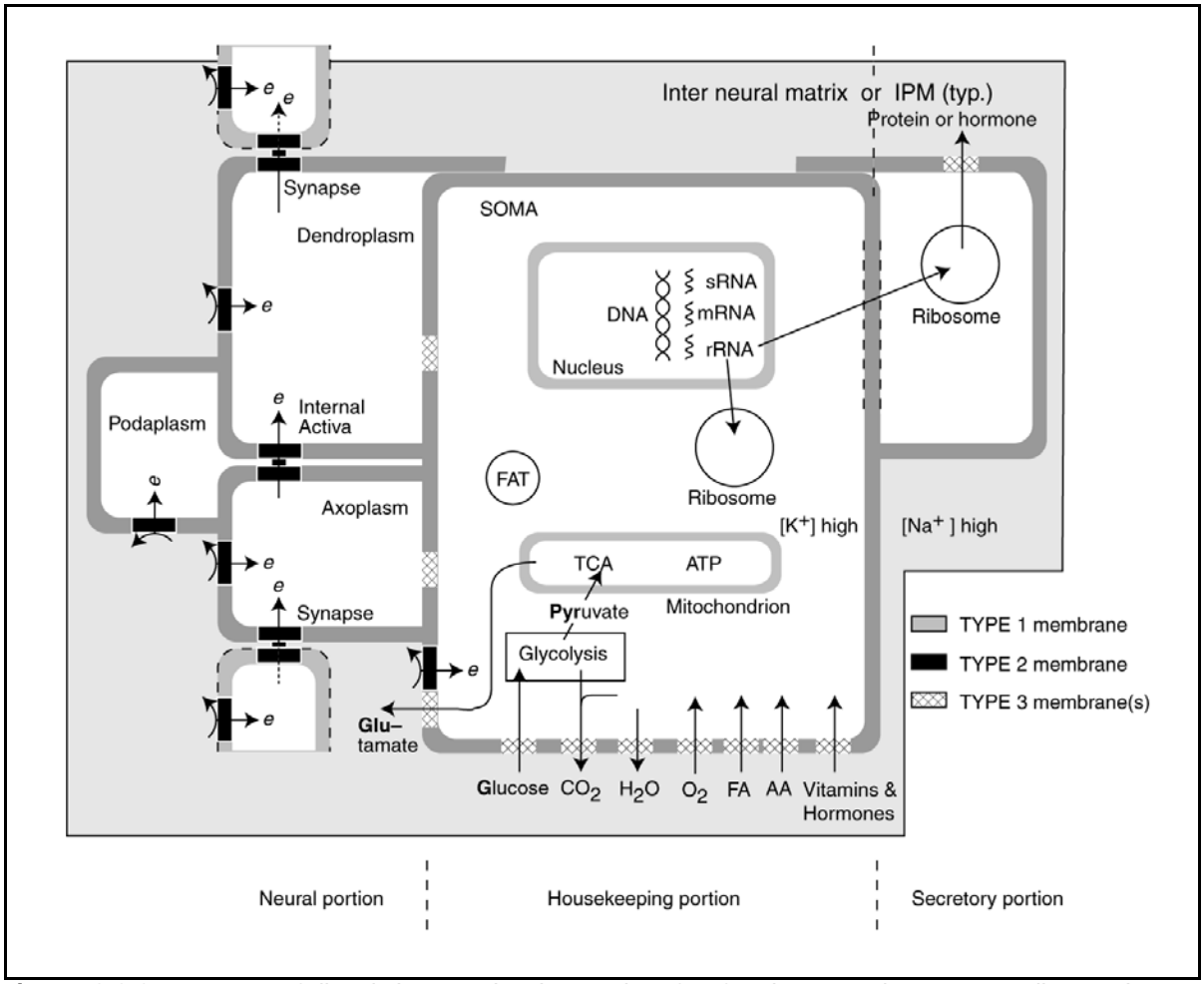

Figure 2.2.2-4 A more fully elaborated schematic of a fundamental neuron. All membrane junctions are lap joints (as shown only along the top edge). The housekeeping functions shared with the prototype cell are shown in the center. The label "Vitamins & Hormones" includes other complex molecular entities. FA; fatty acids. AA; amino acids. The additional secretory functions are shown on the right. The additional neural functions are shown on the left. Dotted shapes on the left are portions of adjacent neurons. Note the three separate conduits associated with the neural portion, including the podaplasm filled podite. See Text.

The general signal flow within a neuron consists of "holes" traveling orthodromically along the signal path when within membranes and between membranes within junctions. As a result, electrons are found to flow antidromically (toward the initial sensory location) along the signal path, as shown by the vertical arrows on the left. Electrons associated with the electrostenolytic (biasing) function move into the various conduits and soma of the neuron from the INM. This is accomplished by hole transport within the membrane.

Cantarow & Shephartz describe the inter neural matrix as a protein-mucopolysaccharide complex. This terminology combines (confuses) the basic matrix and the materials diffusing through it.

The type 1 membrane shown in the figure is impervious to all biological molecules, electrons and holes. The type 2 membrane is impervious to biological molecules but directionally semipermeable to electron and holes. The type 3 membrane is impervious to electrical charges but semipermeable to large biological molecules (and other molecular complexes). All electrical activity associated with the neuron is associated with type 2 membrane. Some type

2 membrane is associated with the electrostenolytic process providing electrical bias to the individual conduits and chambers of the neuron. Other type 2 membrane forms the active semiconductor devices between the conduits within a neuron and between the conduits of separate neurons. The requirement that type 3 membrane be impervious to electrical charges is seen in the membrane separating the neural conduits from the Soma. Operation of the neuron requires electrical isolation while requiring the transfer of materials for maintaining homeostasis and growth.

The individual segments of type 3 membrane shown at the bottom of the housekeeping portion may be specific to individual materials. As noted elsewhere, the biological membrane is largely impervious to simple metallic ions, such as sodium and potassium. While sodium and potassium may exist at very different concentrations on opposite sides of the plasma membrane, this difference is not associated with the transport of the simple ions through the membrane. These material may be transported within larger, electrically neutral, molecular complexes.

Cantarow & Shephartz provide additional detail concerning the materials manufactured within each of the cell elements shown. The key functions not addressed by them are the production of secrete-able proteins (such as opsin in the case of the photoreceptors), and the release of glutamate into the surrounding inter neural matrix (INM) to support electrostenolytics (Chapter 3)..

The conversion of glucose into glutamate within the neuron surfaces an interesting situation. The formation of glutamate via glycolysis and the TCA cycle is an anaerobic process. It requires other amino acids and releases either carbon dioxide or water during the processing. Thus the powering of the neural portion of the neuron is anaerobic! However, the carbohydrate metabolism within the neuron is aerobic! This difference makes it necessary to be precise when discussing the metabolism of the neuron.

The absolute number of chemicals needed to support the homeostasis of a neuron illustrates the difficulty in describing specific disease conditions and the potential for a condition to be related to multiple shortfalls in supplies. It also illustrates how multiple pharmaceuticals could interfere with a specific absorption site and result in the same disease.

The chemical operation of the neuron in support of neural signaling will be developed in detail in Chapter 3. The process is shown schematically by the curved arrow and electron flow symbol associated with each neural chamber. Later material will suggest that at least sections of the plasma membrane are bilaterally symmetrical in permeability to glutamate. It is not clear whether there is a membrane separating the housekeeping and secretory functions.

Cantarow & Shephartz (along with the rest of the neuroscience community up to this day) were unaware of the operation of the Activa within and between neurons. The synaptic gaps involve the transfer of electrons (or holes) between neural conduits. Fully elaborated neurons do not secrete any material within the synaptic gaps shown. The earlier figures found in the neuroscience literature do not address these functions in sufficient detail[33]. They will be addressed below in detail. The caricature provided by Shepherd is unable to account for a number of features of real neurons, specifically the ability of charge to move the length of a two millimeter axon segment within a fraction of a millisecond. The actual rate of electronic signal transmission along an axon segment significantly exceeds one thousand meters per second. However, the Nodes of Ranvier introduce significant delay. The average signal velocity is near 4 meters/sec. Even this number remains far above the proposed chemical transmission (by diffusion) at a fraction of a meter per day.

2.2.2.6.2 The fundamental sensory neuron

The fully elaborated neuron of the previous figure can be detailed to represent a visual sensory neuron as shown in **Figure 2.2.2-5**. The secretory mechanism has been tailored to secrete opsin, the protein forming the disks of the outer segment of the photoreceptor

[33]Shepherd, G. (1988) Neurobiology, 2nd Ed. NY: Oxford University Press. figure 3.14

neurons.

The figure is very similar except in the upper right and upper left. In this case, the secretory function is active. A protein is secreted into the surrounding medium. This protein can be either structural (forming a physical structure with significant mechanical properties) or chemical (generally used to coat the outside of the neuron in the vicinity of type 2 lemma). The variations in this area will be discussed in the following specific sections. In either case, the initial signal is generated by the transfer of energy to the base region of the 1st internal Activa shown symbolically at the upper left. The energy is transferred to the base region of the Activa formed by the constriction of the dendroplasm to form a microtubule. This transfer of energy generates a free electron in the base region of the Activa that constitutes the initial electrical signal. This electron passes through the collector region of the Activa and into the exterior fluid matrix bathing the sensory neuron at that location.

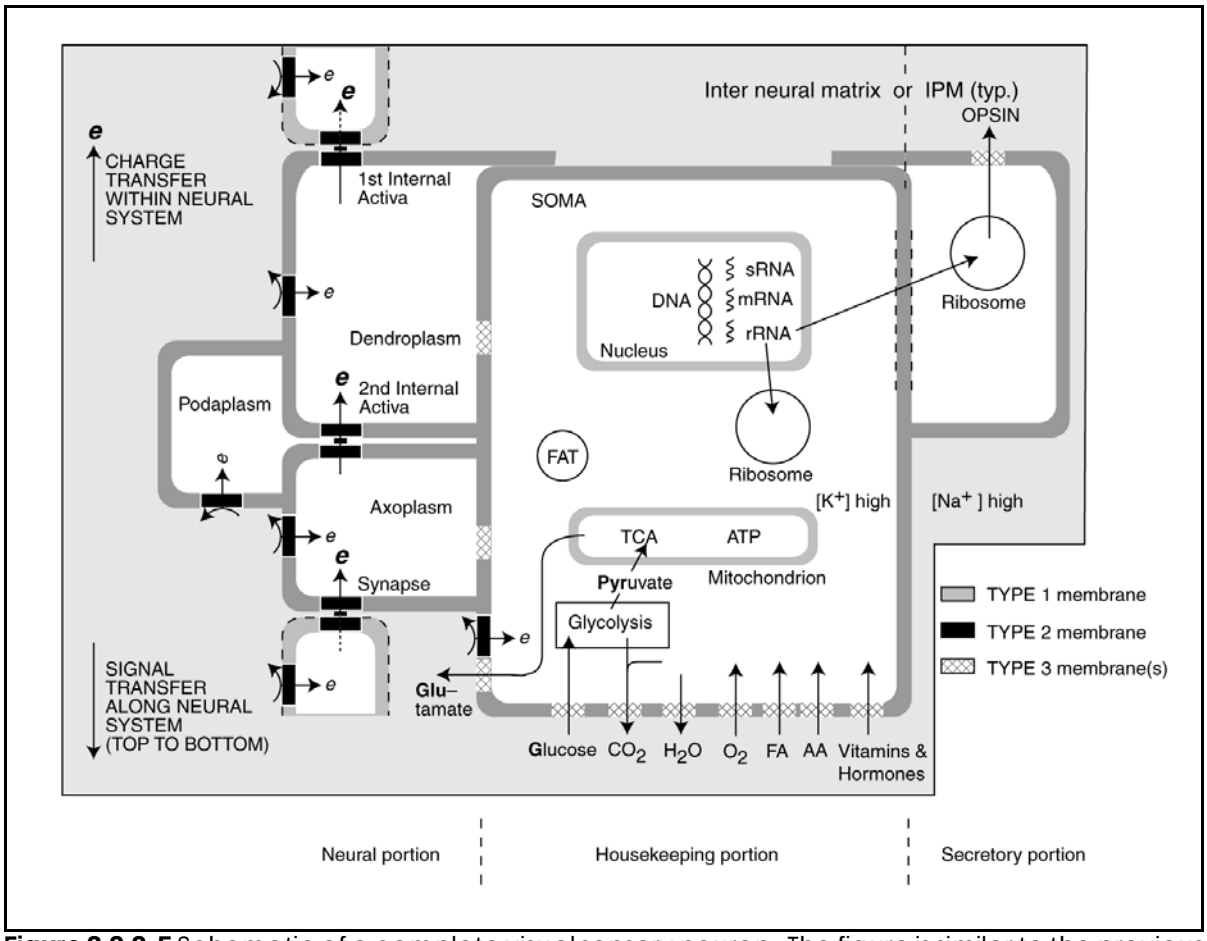

Figure 2.2.2-5 Schematic of a complete visual sensory neuron. The figure is similar to the previous except for the generalized label, protein, at upper right and the redrawing of the signal input structure at the upper left. See text.

For the remainder of this Chapter, the elements of the cell related to housekeeping, growth, glandular and functions other than signaling will not be considered. As an example, the nucleus is not of significance to this discussion. These elements will be assumed to be walled off from the electrical signal carrying portions of the cell by the internal membranes, dendrolemma, podalemma and axolemma of the neuron.

2.2.2.7 Structural features of the *second order* fundamental cell

As noted above, a neuron includes a variety of internal membranes in addition to the enclosing membrane. Furthermore, the enclosing membrane may consist of more than one layer of membrane (each a bilayer by themselves) at some locations. The majority of each membrane, based on area, is composed of type 1 BLM. The type 1 BLM is impervious to both electrical charges and molecular materials (whether ionized or not). Besides forming a physical barrier, it acts as a dielectric contributing considerable capacitance between the electrolytes on each side of the membrane. It is the regions of type 2 and type 3 BLM that define the overall performance of the neuron. These membranes may provide a variety of functions beyond those of interest here. From the electrical perspective, these membrane configurations provide at least the following functions:

+ partitioning the cell electrically from the exterior environment

+ partitioning the cell electrically into internal regions containing different heterogeneous materials.

+ supporting an electrical potential between the above regions and/or the external environment.

+ controlling the electrical impedance between the above regions.

+ **provide an active device "based on transistor action**" between some of the above regions and/or the exterior of the cell.

The presence of a single type 2 region of membrane between two plasmas, supported by electrostenlytics, can provide both an impedance between these two regions and a change in potential between these regions–two very useful mechanisms in electrical circuits. As mentioned previously, the impedance of a BLM does not represent a resistive element. Using Thevinen's Theorem, the impedance of the membrane can be represented by a diode in parallel with a capacitance.

> Here again, it is important to point out that Thevinen's Theorem does not apply to more complicated circuits which include a variable impedance unless the voltage or current level is specified. Specifying these levels complicates the application of Thevinen's Theorem greatly.

The electrostenolytic process acts as a current source, injecting electrons into the space on the opposite side of the membrane from the point of chemical reaction. The current source is accompanied by an electrical impedance that is a function of the active area of the electrostenolytic process on the membrane and both the reaction kinetics of the process and the hydraulic system providing the reaction constituents and removing the reaction products.

The presence of two very closely spaced membranes can provide even greater electrical complexity and opportunity. The scope of these complexities and opportunities is directly related to the distance between the two membranes. Here again, the literature is not well focused. For this work, three classes of juxtaposed membrane pairs will be defined based on the distance between the edges of the two membranes:

+ Tight junctions, spacing typically zero Angstrom (definition probably inadequate)

+ Gap junctions, spacing typically 20-50 Angstrom

+ Chemical junctions, spacing typically greater than 200 Angstrom

The tight junction by definition does not allow for the presence of any independent electrolyte to exist between the two membranes. The gap junction limits the material between its two surfaces to liquid crystalline material. The chemical junction can maintain a conventional fluid

environment between its two surfaces. The last two junctions are those generally related to neural signaling processes. The gap junction is used in internal Activa, in Nodes of Ranvier and in synapses.

Figure 2.2.2-6 is significantly modified from Pappas to illustrate the typical gap junction based on the above terminology and this work[34]. A comparison between the two variants (and their extension justifying physical channels between the two plasmas) is instructive. The labels have been changed to allow the figure to represent a broader range of situations. In the case of the Activa within a given neuron, the two plasmas are both internal to a given neuron (cell). The space marked interplasma space may also be internal or external to a given neuron (and may in fact be a third plasma space within the same neuron). In the previous figure, this internal space was defined as the podite conduit and was filled with podaplasm, an electrolyte similar to that filling the other spaces.

The typical gap junction involves a space between two membranes that is so narrow that large molecules can not persist there. They are essentially squeezed out of this space during the formative process due to Brownian Motion. The material remaining within the gap junction is generally a liquid crystalline matrix of semi-metallic water molecules. While membranes are frequently made up of back-to-back arrangements of the same lipids (type 1 lemma and resulting in a highly effective electrical insulator), this need not be the case. In the gap region, each membrane is made up of two asymmetrical lipid layers (type 2 membranes). This is indicated in the figure by filling the heads of some of the lipid molecules. The resulting configuration consists of two electrical diodes connected back-to-back via a single liquid crystalline, <u>and semiconductive layer</u> of metallic water. This configuration is critically important to the operation of the neural system as shown in the following paragraphs.

The conventional explanation of how electrical charge is transferred from plasma #1 to plasma #2 is to conceptualize large channels traversing the gap capable of transporting large ions or molecules (so-called neurotransmitters in the chemical theory) across the barrier. Such hypotheses require complex structures (frequently labeled vesicles) within the membranes capable of disgorging and accepting these materials within the gap region. A

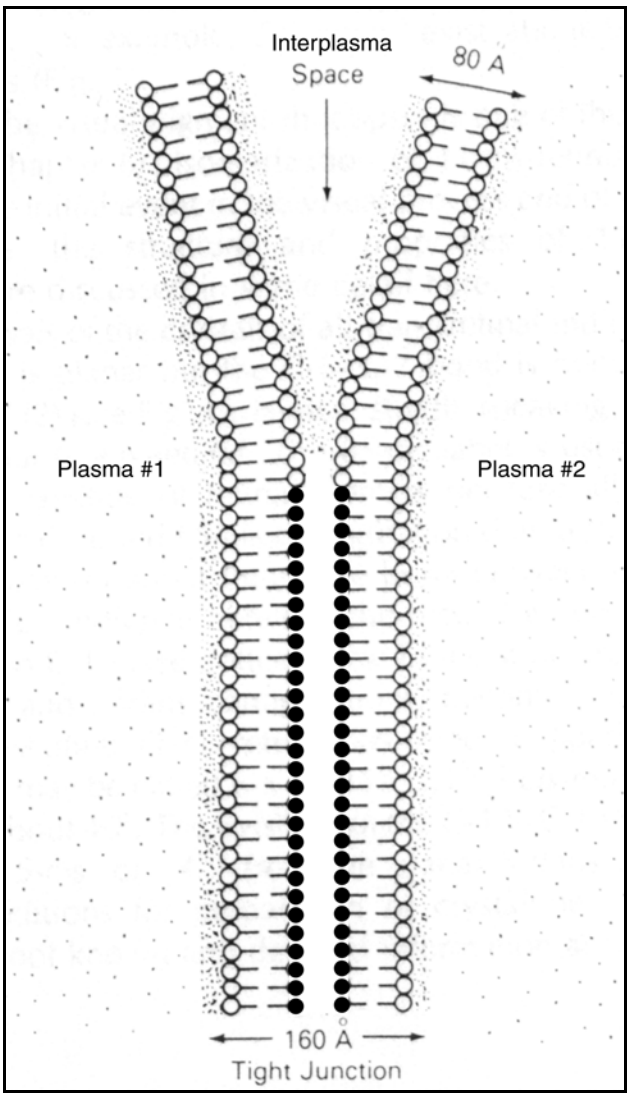

Figure 2.2.2-6 Caricature of a gap junction as it appears in cross section in the neurological system. Two type 1 membranes are shown at the top of the figure (symmetrical lipid layers). Two type 2 membranes are shown at the bottom (asymmetrical lipid layers). Modified from Pappas, 1975.

---

[34]Pappas, G. (1975) Junction between cells. *In* Weissmann, G. & Claiborne, R. *ed.* Cell Membranes: Biochemistry, Cell Biology & Pathology. NY: HP Publishing Co. Chap 9, pp 87-94

distinction needs to be made between such vesicles found within the gap region and those found near the gap region. The actual gap region is generally less than 500 nm, or one wavelength of visible light, in diameter.

If the alternate case (the transfer of charge by the flow of electrons) is examined, the materials present can support the flow of this current without the need for any physical channels. The channels for electron flow within the semi-metallic water material are quantum-mechanical and not "physical." The channels for electron flow within the membranes are the long lipid structures within the individual molecules. In this case, the vesicles are found to be structural elements forcing the mechanical formation of the individual electrically active regions to be discussed in **Section 2.3** The vesicles are not active in signaling.

2.2.2.7.1 The molecular structure of the junction between two membranes

Figure 2.2.2-7 provides a cross sectional view of two membranes brought into close proximity. Each membrane is the same as that shown in **Section 0.2.1.3** The two solutes are labeled the dendroplasm and the axoplasm. The numbers 1 through 7 are those assigned by a cytologist to a seven-layer junction between two bilayer membrane walls. Note they usually see layers 1, 3, 5 & 7 as dark lines and assign 2, 4 & 6 to the light spaces between these lines. It is seen from this figure that the characters of these spaces are different. Whereas 2 & 6 appear empty, 4 has a distinct character. In fact, the material represented by 4 is critical to the operation of the neurons. A similar material that is performing a different function is found between layers 1 & 7 and their respective plasmas. It would be advisable to number these regions 0 & 8 when speaking of the functional performance of such a sandwich.

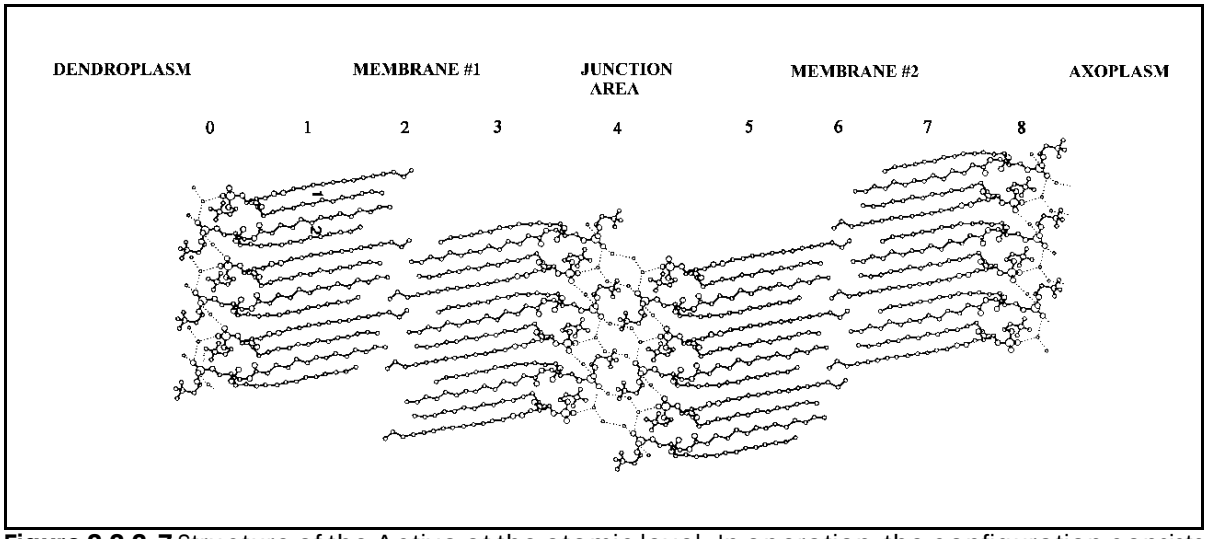

Figure 2.2.2-7 Structure of the Activa at the atomic level. In operation, the configuration consists of two bilayer membranes (BLM) in close proximity and appropriate voltages applied between the dendroplasm, the axoplasm and the material in the junction area between the two bilayers (the podaplasm). The lattices in the junction area are confined and form semi-metallic water while those on the extreme left and right surfaces are more conventional water. Detailed atomic structure of an individual membrane from Pearson & Pasher, 1979.

Note the complex molecular structure at the interface between each plasma and the corresponding membrane. These areas are described in terms of relatively weakly bound water. The structure in the junction area, between the two membranes is highly confined and consists of semi-metallic water. There is no physical movement of ions within this overall structure at biological temperatures. No ions move through either the hydrophobic liquid crystalline lipids or through the liquid crystalline semi-metallic water. This is true even under the influence of external voltages.

Water ice exists in a large variety of forms. Chaplin has addressed its many forms at temperatures below zero Celsius[35]. Forms of ice have also been encountered at higher temperatures in situations where the molecules have been constrained in their movement to below the Brownian motion expected at that temperature. After discussing lower temperature ices, Chaplin notes, "but other ices have been found at confined surfaces. 'Metallic' water, where electrons are freed to move extensively throughout the material and the atoms of water exist as ions, probably exists as an antifluorite type structure[m]." and in footnote m, "The antifluorite structure consists of a face centered cubic (FCC) unit cell with oxygen anions occupying the FCC lattice points (corners and faces) and hydrogen cations occupy the eight tetrahedral sites within the FCC lattice." Metallic water is not an official name for any other form of ice at this time.

The term semi-metallic water will be used here because only the electrical properties of the material are of interest.

When configured as shown, the areas marked 3, 4 & 5 exhibit unique quantum-mechanical properties. These properties result in a unique electrical feature as well. This feature is defined as an Activa. The unique electrical feature of the Activa and the overall structure will be explored further in **Section 2.3**.

2.2.2.8 Electrical features of the *second order* fundamental cell

2.2.2.8.1 The electrical description of the conduit wall

As developed in **Section 1.2.4**, the basic structural form of the individual conduit of a neuron is that of a sausage, a cylindrical structure terminated by two spherical caps and filled with an electrolyte. This basic structure is frequently replicated, sometimes extensively, at an ever decreasing scale in the ramification of a neurite tree or near the pedicles of an axon. However, the basic structure remains the same virtually everywhere in a neuron.

The vast majority of the conduit wall consists of type 1 BLM. Thus, the majority of the surface of a conduit is inert. It is impervious to both electrical charges and molecular transport. The conduit behaves primarily as a dielectric separating two conducting materials. Thus its principle characteristic is its electrical capacitance. Small areas of the surface of the conduit are formed of type 2 and type 3 BLM. These areas continue to act as dielectric mediums for electrical purposes. However, they also exhibit additional properties that will be discussed below.

Lehn has spent considerable effort attempting to show how the molecules in a bilayer membrane can conduct electricity[36]. He notes they can conceivably transport charge by "electron hopping" (hole conduction in the terminology of this work) or by electron conduction along a continuous conjugation path formed by π-bonds. He also addressed the problem of suitable polar groups at the hydrophilic surfaces of such molecules to support electrical connection to the surrounding aqueous fluid. While his work has shown that films of molecules exhibiting π-bonds exhibit a wide array of optical polarization effects, he has not established that biological bilayers exhibit significant electrical conductivity. The long chain lipids forming the majority of the individual molecules of the conduit wall are not conjugated. Hence, they are capable of supporting hole conduction by electron hopping but not π-bond conduction. By employing large adjacent groups of such molecules, significant conductivity can be achieved at the impedance levels used in neurological circuits.

2.2.2.9 Electrical features of the *second order* fundamental cell

It came to be realized in transistor technology that a semiconducting material exhibited unusual

---

[35]Chaplin, M. (2011) Water Structures and Science http://www.lsbu.ac.uk/water/ice.html

[36]Lehn, J-M. (1995) Supramoleculear Chemistry. NY: VCH page 100-110

conductivity characteristics which could not be explained simply by electrons moving through the conduction band of the material; it was necessary to also consider the movement of "holes" located in the valence band. These holes were locations in the crystal lattice where electrons were missing. The total current through the bulk material was the summation of the current due to movement of both the electrons and the holes. It was found that, if two pieces of this material containing different levels of dopant were brought into very intimate contact, the electrons and holes were subject to the conflicting pressures of the laws of diffusion and electrical potential. These realizations provided the explanation of the *rectifying characteristic* of these materials (and other materials that had been used for years without a clear knowledge of how they worked). The active process was described as occurring at **a junction** between two such materials and the resulting device was described as **a junction diode**. It exhibited a conductance which was asymmetrical and described by the diode equation, $I = I_o(\exp((V/Vo) - 1)$.

Further work led to the understanding of how two such junction diodes worked when they were brought into intimate contact. If two of these junctions were manufactured such that the cathode area was very thin and shared by the two diodes, the resultant device consisted of two junctions in intimate contact in a back-to-back configuration. Depending on what voltages were applied to these devices, very strange things happened. If one diode was forward biased, it was easy to inject a current into the device from the emitter into the common base. If simultaneously, the third terminal was *reverse* biased with respect to the base, a current would appear at the collector essentially equal to the current injected at the emitter. This current is directly proportional to the current injected into the input diode and exhibits no relationship to the impedance of the output diode.

This "transistor action" was accounted for based on the action of the electrons and holes in the material responding to the laws of quantum-mechanics in addition to the requirements of the laws of diffusion and electrical fields. "Transistor action" resulted in spite of the presence of opposing electrical potentials. Significant power amplification was possible through this process since the input current was at a low impedance level and the output current was at a high impedance level.

> Amplification is frequently a difficult concept for the uninitiated. It is fundamentally a concept based on the ratio between the power associated with a signal at the output of a circuit divided by its value at the input to the circuit. If the input and output circuits are at the same impedance level, the amplification is given by the output voltage divided by the input voltage. It is possible to have significant amplification with the same voltage amplitude signals at input and output if the impedance levels are different. The second Activa in each sensory neuron is used to reduce the output impedance of the axoplasm potential.
>
> The terms voltage gain and current gain are terms used in the vernacular to express amplification without regard to the associated impedance levels.

2.2.2.9.1 Electrical description of the electrostenolytic process

While the area of a typical conduit devoted to type 2 BLM is quite small, it is very important. This area still exhibits a capacitance as calculated above. However, it also exhibits a nonlinear resistive impedance characteristic of an electrical diode. The permeability of this area of the BLM is highly asymmetrical to the transport of elementary electrical charges. In the absence of the reactants associated with the electrostenolytic process, this area of type 2 BLM when combined with the rest of the conduit can be represented by a diode in parallel with the capacitance of the overall conduit. The diode is oriented so that it cannot sustain a positive potential within the conduit relative to the surrounding medium. Any such potential will cause electrons to flow through the diode from the exterior environment into the interior and neutralize the original potential. The diode is of very high quality and it can sustain (in conjunction with the capacitance) a negative potential for a long period of time (typically many hours).

Where the type 2 BLM is designed to support the electrostenolytic process, a stereochemical aggregate of molecules on the outer surface of the membrane is able to cause the local

membrane outer surface to become negative relative to the interior plasma. This quantum-mechanical potential is sufficiently strong to cause an electron to be injected into the interior of the conduit, employing its diode characteristic, for every molecule of reactant. As a result, the interior of the conduit becomes negative relative to the surrounding INM. The maximum value of this potential based on the conversion of glutamic acid to GABA is between 150 and 154 millivolts (**Chapter 3**).

The ability of the electrostenolytic process to sustain this potential in the presence of other circuit elements depends on the reaction kinetics of the process and the relative availability of the reactants. From an electrical perspective, the electrostenolytic process can be modeled as a current source in parallel with a resistive element or a voltage source in series with a resistive element. The latter will be the most useful in the work to follow.

> The operation of the electrostenolytic process explains a process recently reported in the chemical literature, but without supporting the frivolous designation of a "reversed electron transport[37]" or "uphill electron transfer[38]" phenomenon.

Subsequent discussion will evaluate whether the typical electrostenolytic process employs type 2 lemma, or whether the combination described above is more properly described as type 4 lemma, like that employed by the chemical sensory neurons (**Chapter 8**)

2.2.2.9.2 Electrical description of gap junction between two membranes

The importance of the liquid crystalline state of matter in biology has not gained wide acceptance in the biological community. Liquid crystalline materials exhibit unexpected electrical properties. Basically, they exhibit unusual electrical conductivity--frequently in asymmetric ways and in only certain planes. These properties are due to the semi-crystalline structure of the membranes and the presence of specific electrical species within these structures. Such structures can be described as biological semiconductors and bring to biology much of the flexibility found in Solid State Theory--specifically, "transistor action." "Transistor action" was first described in the 1950's to explain some unexpected effects measured in unusual configurations of a semi-conducting material, specifically "doped" germanium. Adding minute amounts (parts per billion) of a dopant to a part of a crystalline structure of germanium created these quantum-mechanical properties in an otherwise molecularly symmetrical material.

It is proposed here that certain BLMs when brought into intimate juxtaposition exhibit "transistor action" and provide the nonlinear current-voltage relationships observed in neurons. This capability has not been defined previously in the literature. It is entirely independent of any ions moving through any membranes associated with the neuron.

When two areas of type 2 BLM of the correct polarity are brought into close juxtaposition to form a gap junction, and electrically biased appropriately, a unique electrical situation is observed. As shown in [**Figure 2.2.2-7**], the entire structure is liquid crystalline. **Figure 2.2.2-8** illustrates the electrical circuits describing the above physical configuration. The circuit in frame **A** represents the two asymmetrical BLM's as individual diodes connected to a common ground terminal representing the junction area. The letter designations will be defined more explicitly later. For now, the terminal marked E represents the electrolyte forming the dendroplasm to the left of the junction. The terminal marked C represents the axoplasm to the right and the terminals labeled B represent the "base" terminal of each diode. This is the conventional circuit based on conventional physics. The battery symbols shown represent small quantum-mechanical potentials associated with the diodes. These batteries cannot support external current flow.

---

[37]Friedrich, M. & Schink, B. (1993) Hydrogen formation from glycolate driven by reversed electron transport in membrane vesicles of a syntrophic glycolate-oxidizing bacterium *Eur J Biochem* vol 217, pp 233-240

[38]Elbehti, A. Brassuer, G. & Lemesle-Meunier, D. (2000) First evidence for existence of an Uphill Electron Transfer through the bc1 and NADH-Q oxidoreductase compleses of the acidophili obligate . . . . *J Bacteriol* vol 182(12), pp 3602-3606

They are frequently described as cutin potentials, V-sub-γ. Currents can be passed through either diode in the directions shown upon application of a positive potential to E or C (relative to the ground potential at B) that exceeds the intrinsic potential of the diodes (shown by the battery symbols). The two diodes will operate entirely independently.

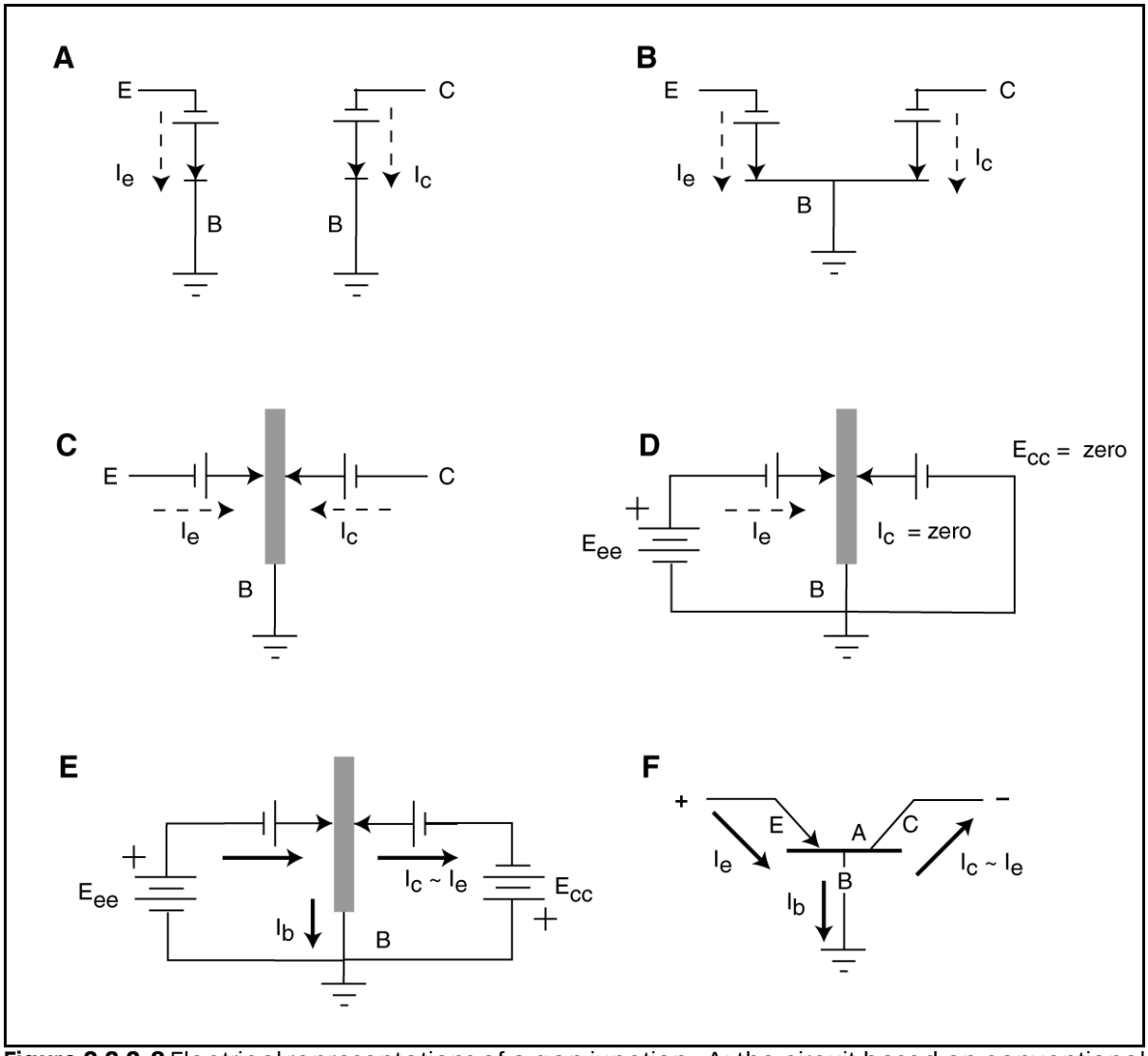

Figure 2.2.2-8 Electrical representations of a gap junction. A; the circuit based on conventional physics. B; the circuit based on quantum-physics. C; an alternate physical representation of B. D; a positive voltage, E_{ee}, applied to the emitter of C but not to the collector. No current flows in the collector circuit. E; A reverse bias, E_{cc}, is applied to the collector terminal. A current flows in the collector circuit F; standard symbology for the biological Activa. See text.

Frame **B** shows an equivalent circuit representing a fundamentally different situation. If the base regions of the two diodes (marked B) are sufficiently close together (and formed from the same liquid crystalline medium–semi-metallic water), they must be considered to operate in the quantum-mechanical domain (where the rules of conventional physics do not apply). It will be shown in **Section 2.3** that this is the actual situation found in every neuron of the animal system. While both diodes will still conduct currents when forward biased as above, the performance of the overall circuit cannot be predicted by the laws of conventional physics under other bias conditions.

The configuration of frame **B** was that originally described by the inventors of the man-made transistor. However, an alternative configuration soon developed that made it easier to understand the phenomenon involved. Frame **C** shows a redrawing of frame **B** to represent the molecular structure in the previous figure. This format is continued in frames **D**, & **E**. In frames **C**, **D** & **E**, the currents must change direction as they travel through the common liquid crystalline region if they are to exit through the "base" terminal, B.

Look at the potentials applied to the terminals marked E (emitter) and C (collector) relative to the base terminal B, individually. If the voltages are both positive, it would be expected that the currents I_e and I_c of frame **C** would flow in the directions indicated. They do. In frame **D**, the collector terminal is at zero and no current would be expected to flow through that terminal regardless of the current through the emitter terminal (which in this case is positive). This is observed to be true. In frame E, the collector terminal is made negative. This reverse biases the diode associated with the collector lead and no current would be expected to flow in this lead. In the absence of any current in the emitter lead, this is the observed condition. However, if current is injected into the liquid crystalline material via the emitter terminal, E, while the collector is reverse biased, a current is in fact measured in the collector lead. This current flows in the opposite direction to the expected current and is nominally equal to the injected current (98–99.5% depending on quality of manufacture). This current is the result of transistor action in a liquid crystalline semiconductor device. **This transistor action is the key to the operation of the entire neural system.**

An arrow has been added to frames **E** & **F** to define the base current, I_b. The relationship, $I_e = I_b + I_c$ is an important and deterministic one. The ratios between these currents are specific for a given device, that will henceforth be labeled an Activa in this work. In man-made transistors, the ratio of collector to emitter current and base to emitter current are indicative of the quality of the detailed manufacturing process used. The significance of this relationship in biological Activa will be developed in **Section 2.4.3.3**.

The direction of the arrow representing I_c makes it clear that the source of this current is a generator in parallel with the diode representing the BLM forming the collector portion of the Activa

The high transfer efficiency of electrons from the emitter terminal to the collector terminal of an Activa, over 95% in real neurons, is impressive. It is discussed further in **Section 2.4.3**. This transfer is achieved without any chemical process whatever. Neither a chemical reaction nor the secretion of a so-called neurotransmitter is required.

Frame **F** shows the adoption of a standard symbol to represent this phenomenon, "transistor action." The letter A is shown above the base symbol to indicate it is an Activa, a natural active semiconductor device found in all neural systems. When biased as shown, a conventional current injected at E will cause a conventional current to flow at C in the directions shown in spite of the reverse bias applied to the collector terminal (the flow of electrons is actually in the opposite directions). This symbol will be used in the remainder of this work to indicate the site of transistor action within a gap junction.

The location of the arrowheads within the symbology of frames **E** & **F** are significant. In frame **E**, and the earlier frames, the device is drawn entirely symmetrical. However, frame **F** shows only one arrowhead, associated with the emitter terminal. In the standard symbol of a transistor, the arrowhead is associated with the emitter terminal. This terminal is forward biased and current flows into it. The collector terminal is reverse biased and, in the absence of current in the emitter circuit, no current flows in the collector circuit. Hence, no arrowhead. In fact, any junction type transistor (or Activa) is internally symmetrical. The directions of current flow are determined by the bias potentials applied to the device and the quantum mechanical character of the materials forming the device. In the case of an Activa, the device is described quantum-mechanically as a *pnp*-type liquid crystal semiconductor- based transistor. This designation indicates that the semi-metallic water forming the central liquid crystalline material of the Activa is of *n*–type. The two type 2 BLMs contribute *p*-type semiconducting material. The majority of charge carriers in *n*-type semiconducting material are electrons. The majority of charge carriers in P-type semiconducting material are holes, with number of electrons being in the minority. Textbooks on semiconductor physics should be consulted for details in this area. **Sections 1.3.2.2** & **2.2.1.3** discusses the concept of holes very briefly. No Activa of the opposite variety, *npn*-type,

have been found in neural systems.

The individual features, and limitations, associated with Activa will be developed incrementally in the following sections.

2.2.3 The three terminal biological transistor

If it were possible to bring into intimate contact, two *asymmetrical* membranes such that their cathodic terminals merged quantum-mechanically and it were possible to vary the voltages on the two outer surfaces with respect to the voltage associated with the central region between them, transistor action would result. The resultant device, called an Activa, would exhibit near electrical autonomy between the two external surfaces, *except for the common current appearing to flow between the two surfaces*[*]. **Figure 2.2.3-1(A)** and **(B)** illustrate this extremely useful configuration. Frame (B) introduces the conventional transistor symbol modified to include an "A," to designate an active biological semiconductor device, the Activa.

The configuration shown in (**A**) was introduced incrementally in earlier parts of this chapter. In this frame, the arrows indicate the direction of conventional current flow. The direction of actual electron flow is in the opposite direction. The space between the two membranes is labeled B and is shown as an extremely thin region of different composition than the two membranes. It is defined as the base. The base is conductive to electrons and holes but not ions. The left-most surface is labeled E, for emitter and the right-most surface is labeled, C, for collector. These labels correspond to the language of the solid state physicist. Conventional current is introduced into the base region from the emitter. A nearly identical conventional current originates in the base and emerges at the collector. Frame (**B**) shows the shorthand notation corresponding to the physical conditions of frame (**A**). The arrowhead highlights the emitting (or injection) of conventional current into the base region. This arrowhead also suggests the low electrical impedance of this input structure when properly biased. The lack of an arrowhead on the collector lead is suggestive of the high electrical impedance of this circuit when properly biased.

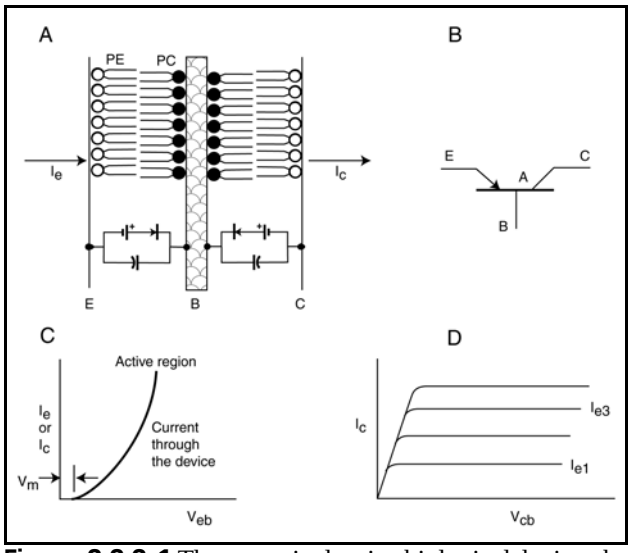

Figure 2.2.3-1 Three terminal active biological device, the Activa. (A) A cross section of the junction between two membranes. Equivalent chemical and electrical schematics are shown. (B) Equivalent circuit of (A) if the two bases are intimately related quantum-mechanically. Note the "A" above the base region in (B). The conventional currents are positive for a positive voltage V_{eb}. (D) Output current Ic versus the collector potential V_{cb} where V_{cb} is negative.

The Activa in this three-terminal form is the basis for the operation of the signal handling characteristics of all neurons. Note the back-to-back connection of the two *pn* diodes in frame (A). This orientation leads to the designation *pnp* for a structure of this type. In the absence of transistor action, no current will flow between the emitter and the collector sides of this structure.

To achieve "transistor action," three conditions must be met:

---

[*]In man-made transistors, the output current as a function of the input current is given by
I(out) = I(in)*(1 - α) where α is usually 0.01-0.02 depending on the quality of the manufacturing process.

+ each membrane "system" must be operational; that is the membrane must be of the right constituency and be bathed on each side by an appropriate electrolyte.

+ the input membrane must be forward biased so as to conduct current relatively easily and the output membrane must be reverse biased so that it does not easily conduct current.

+ the distance between the adjacent membrane walls must be less than the distance required for transistor action, i.e., a charge passing through the input membrane will continue on and pass through the output membrane in spite of the opposing polarity of the output membrane. The required distance is less than 10 nm (100 Angstrom).

The electrical characteristics of the Activa under these conditions are relatively simple. The input impedance of the device is relatively low and the output impedance of the device is quite high. The input characteristic is that of a forward biased diode in series with a battery as developed earlier. The output characteristic is represented by a very high impedance as expected from a reverse biased diode in series with a small battery. No current flows in the output circuit in spite of the external bias supplied to the device. However, a current will flow in the output circuit equal to the current in the input circuit due to "transistor action." Since the output current is essentially the same as the input current, the transfer characteristic, i. e. the output current as a function of the input voltage, is also given by the diode equation plotted against different coordinates. These characteristics are illustrated in **Figure 2.2.3-2(C) & (D).**

Frame (**C**) displays the input, or emitter, current as a function of emitter-to-base potential within the operating range of the device. Since the collector current is essentially the same as the emitter current, the vertical axis shows both labels. For the *pnp*-type of device found in all neurons, the current increases with a positive increase in emitter-to-base potential. Therefore, the flow of electrons also increases but in a negative direction. The diode characteristic is offset by the presence of the intrinsic membrane potential, V_m, of the emitter-to-base membrane. This parameter is usually symbolized by V-sub-γ in electrical engineering texts.

Frame (**D**) displays the output current of the Activa as a function of the collector-to-base potential. As long as the collector potential is more negative than required to reverse bias the collector, the output current is directly proportional to the input current and is independent of the collector potential as shown. The size of the intrinsic membrane potential of the collector-to-base membrane is usually too small to be plotted on this graph.

The symbol for the biological transistor does not show the internal voltages implied by the symbol "A." However, they are shown explicitly in the conventional equivalent circuit for a biological transistor. This notation will be developed further in **Section 1.3.**

To aid in the modeling of neural circuits, it is important to define the fundamental properties of the Activa. As in the case of man-made transistors, the Activas can vary in gross properties based on their construction. However, once made, their fundamental properties vary only with temperature.

The following sections will define the principle fundamental parameters and performance parameters of the Activa. The physical dimensions will only be discussed obliquely. **Chapters 9 & 10** will explore these parameters in detail.

When examining the face of one membrane of a gap junction, an orderly pattern is frequently discerned. This pattern is generally described as a close packed hexagonal arrangement of domains, each about 150 Angstrom across[32]. This dimension describes the "unit Activa." **Figure 2.2.1-2** shows a similar organization but for a "gap junction" found in the liver of a rat. It is useful to differentiate between the dimensions describing the smallest functional Activa, the unit Activa, and the larger arrays of Activa that appear as a single unit under lower resolution microscopy. The total diameter of the individual disks of Activas found within the neural system are indicative of their current carrying capacity in support of a particular application.

---

[32]Cole, K. (1968) Membranes, Ions and Impulses. Berkeley, CA: University of California Press pg 515

2.2.3.1 Comparing the Activa to a man-made transistor

There are two distinct classifications of man-made transistors, those described as junction transistors and those described as field effect transistors. Junction transistors show a continuity between the current into the emitter terminal and the current out of the collector terminal. Field effect transistors (FET) exhibit a current that is proportional to the potential on a gate but no current flows through that gate (at low frequencies). Only junction devices have been found among biological semiconductor devices, Activas. Neither FETs, or the more widely known MOSFETs and CMOSFET's are used in biology!

One of the common methods of creating man-made junction transistors capable of handling high power levels is to use replication techniques and then wire the various devices in parallel. As will be shown in Chapter 10, biological devices also use this technique frequently. As indicated in **Section 2.2.3.3**, individual devices, defined here as a unit Activa, are formed into an array on the surface of the plasma lemma and connected to a common dendroplasm.

There are two fundamental forms of man-made junction transistors, those with a base material that is a single element, such as silicon or germanium, and those with a base material that is a compound, such as gallium arsenide, mercury cadmium telluride, etc. The compounds offer lower band gaps in their electronic structures than do the elements. The n-type material forming the base in the Activa consists of liquid crystalline semi-metallic water. When in the liquid crystalline or crystalline phase, water is a compound with a very low band gap.

The band gaps of silicon and germanium (effective values of 36 mV and 18 mV) have led to offset parameters for diodes made of these materials of 0.6 and 0.2 volts respectively. These offset parameters are considerably higher than the 10 mV values measured in biological semiconductors and discussed below.

There are also two fundamental types of man-made junction transistors, those with an n-type base material and those with a p-type base material. To date, all known biological transistors have semi-metallic water as a base material. This material is of the n-type. As noted earlier, all known biological transistors are of the pnp type.

2.2.3.2 The Ebers-Moll model and the Early Effect

Ebers and Moll provided an early detailed model of the operation of an active semiconductor device like the Activa[33]. Versions of the Ebers-Moll model of such devices have appeared in many textbooks. However, they do not always appear in the same form. Some of the versions are simplified to meet the author's goals. This is particularly true in texts for non-electronics majors[34]. Millman & Halkias develop the concept in two different chapters of their book and lean upon a simplified equation (3-9) in a third chapter[35]. They provide a pair of equations related to the model whereas many authors only present one. In their presentation in Section 5-12, they rely upon the diode equation with the offset potential (or cutin potential), $V\gamma$, equal to zero. This is acceptable when dealing with collector saturation potentials that are many times higher than $V\gamma$. However, this is not the case in most biological circuits. An even more complete presentation than that in Millman & Halkais is required under these conditions. This more complete presentation replaces the emitter minus base potential, $V_{EB,}$ by by the more precise potential, V_{EB} -$V\gamma$.

When evaluating a biological transistor, an Activa, it is also important to be aware of the Early Effect. This Effect, discussed in Section 5-5 of Millman & Halkias, documents the reduction in output signal as a function of input signal due to the reduction in the space charge within the

---

[33]Ebers, J. & Moll, J. (1954) Large-signal behaviour of junction transistors *Proc IRE* Vol. 42, pp 1761-1772

[34]Horowitz, P. & Hill, W. (1989) The Art of Electronics, 2nd ed. NY: Cambridge University Press, pg 80

[35]Millman, J. & Halkias, C. (1972) Integrated electronics, NY: Mc Graw-Hill, chapters 3, 5, & 19

base region. Although evidence of this Effect was not found in the biological literature, the literature does not exhibit the precision required to recognize this Effect explicitly.

2.2.3.3 The fundamental electrical parameters of the unit Activa

Attempting to specify the fundamental electrical parameters of a unit Activa or of a given Activa array is difficult based on the available literature. The diameter of the membrane area under test has generally been set by the size of the electrical probe. This value has been used under the assumption that the membrane is uniform throughout the area being examined. This assumption is not valid. The test protocol should determine the size of the active region of membrane under test. The most critical parameters are those found in the diode equation discussed previously. The best available sources of current-voltage data applicable to an Activa appear to be Luttgau (Yau) and Eliasof (**Section 1.3.2.1.2**).

2.2.3.3.1 The offset parameter

Only limited data is available in the literature concerning the diode characteristic of the Activa. The data of Eliasof discussed in **Section 1.3.2** can be used. However, that data was not collected under the desired conditions. It was collected using a Leyden jar rather than a Ussing apparatus. Therefore, the current-voltage characteristics include a resistive impedance due to the electrolytes on each side of the membrane. These impedances obscure the underlying diode characteristic associated with the membrane. By looking at the data as an ensemble, a trained eye can estimate the diode characteristic to a first approximation. The data appears to converge to a value very similar to the current-voltage characteristic provided by Luttgau[36] and reproduced by Yau[37]. Luttgau presented a characteristic obtained with a pseudointracellular solution on one side of an asymmetrical membrane and a "Normal" Ringer's solution on the other. He then introduced variable amounts of Ca^{2+} and Mg^{2+} into the pseudointracellular solution. By using the characteristic for zero amounts of added cation, a very good approximation to the desired diode characteristic is obtained.

Assuming his Normal Ringer's solution does not disturb the Helmholtz layer of bound water immediately adjacent to the plasma membrane, the data of Luttgau provides the best available <u>estimate</u> of the offset parameter of the in-vivo membrane generally associated with an Activa of a synapse. This configuration consists of a cytoplasm on the internal side of a membrane and a water molecules on the external side. The parameter has a value of 10 mV at 300 Kelvin. Data has not been found that unambiguously defines the offset parameter for the Activa formed within a cell. The offset parameter of these Activas may have a value of near zero because of the similar composition of the fluids on each side of the membrane.

2.2.3.3.2 The thermal parameter

The thermal parameter, V_T, is given in several papers in the literature as equal to 25 mV or 26 mV. 26 mV is the theoretical value for a device operating at 300 Kelvin. 26.7 is the equivalent value at 310 Kelvin (98.6 F) and a value of 25 mV could be expected in cold blooded animals at laboratory temperatures. Thus, the theoretical value of this parameter only varies by about 1.7 mV over the biological range. Obviously, greater care will be required in the laboratory to measure this parameter accurately.

2.2.3.3.3 The reverse saturation parameter

The reverse saturation current parameter, I_0, can be determined from a variety of diode characteristics in the literature. However, determining the reverse saturation current density, I_0/unit area, is more difficult. Most authors have not given the precise area of the membrane under test and most authors have not made measurements up to a voltage of -150 mV which

---

[36]Luttgau, H. *ed*. (1986) Membrane Control of Cellular Activity. Stuttgart: Gustav Fischer, pp 343-366

[37]Yau, K. (1994) Phototransduction mechanism in retinal rods and cones. *Invest. Ophthal. Vis. Sci.* vol. 35, pp 9-32

would give the most precise value. Most of the available data suggests a reverse saturation current, I_0, between 18 and 25 picoamperes for the typical biological diode.

The estimated reverse saturation current density of the giant axon of squid is less than 0.01 ma/cm^2 based on Cole[38]. It is difficult to determine from Cole what area was assumed in his measurements. It may have been larger than the actual type 2 region of membrane.

2.2.3.3.4 The forward transconductance

A characteristic that is frequently very important in understanding the operation of a neuron and its conexus is the forward transconductance of the Activa. The transconductance is the ratio of the change in current at the collector to the change in voltage between the emitter and base terminals. The symbol used is g_m. There is no direct data available for this parameter and it varies with the equivalent area of the Activa (sum of the unit Activa areas) within the neuron.

Values for this parameter will be developed in later chapters of this work.

2.2.4 Defining the conexus within a static neuron

This section will describe the electrical circuits associated with a neuron based on the discussion of the previous section. It will develop an additional critical feature of neurons not previously documented in text form. **Circuits similar to the synapses found between neurons are also found inside of neurons**. They are found to occur wherever a gap junction is formed by areas of individual conduits exhibiting the necessary juxtaposition of type 2 BLM. These circuits will be given the generic name conexus. ***A conexus is a circuit containing at least one Activa along with the associated electrical elements required to bias the Activa, to excite the Activa and to extract signals from the Activa.***

The following subsections will describe the electrical, morphological and cytological features of two of the three basic functional (active) circuits found within the neural system of an organism, the conexus within a neuron and the conexus found between neurons. There is also a hybrid form, commonly called a Node of Ranvier, that will not be discussed in detail until Chapter 3.

Brief note will be made of the fact that a single morphologically defined neuron may contain multiple functional units that are given the name conexus. The fact that multiple conexuses can be found within a single neuron forces a redefinition of the fundamental physiological unit in neuroscience. **It is the conexus that is the fundamental physiological unit of the neural system**, not the neuron itself. The neuron remains the fundamental morphological and metabolic unit of the neural system.

2.2.4.1 Defining the electrical circuits of a neuron

The fact that the neurons operate in a nonlinear impedance environment, at least in the second order, has been recognized since at least 1949[39]. In those early days, the term “anomalous rectification” and “inward rectification” were found in the literature. Recently, the expression has frequently been shortened to just rectifying channels. It is important to understand the theoretical and practical voltage-current characteristic of a diode or Activa. This characteristic is fundamental to the operation of all neurons. It plays a primary role in all experimental investigations and the proper interpretation of all test results.

The fundamental voltage-current characteristic of all diodes and active semiconductor devices is a simple exponential function. As usually presented in conventional transistor circuits, the input

---

[38]Cole, K. (1968) Op. Cit. fig 4:52

[39]Katz, B. (1949) Les constantes electriques de la membrane du muscle. Archived des Sciences Physiologiques, vol. 3, pp. 285-299

impedance of a typical Activa is shown in frame **A** of **Figure 2.2.4-1**.

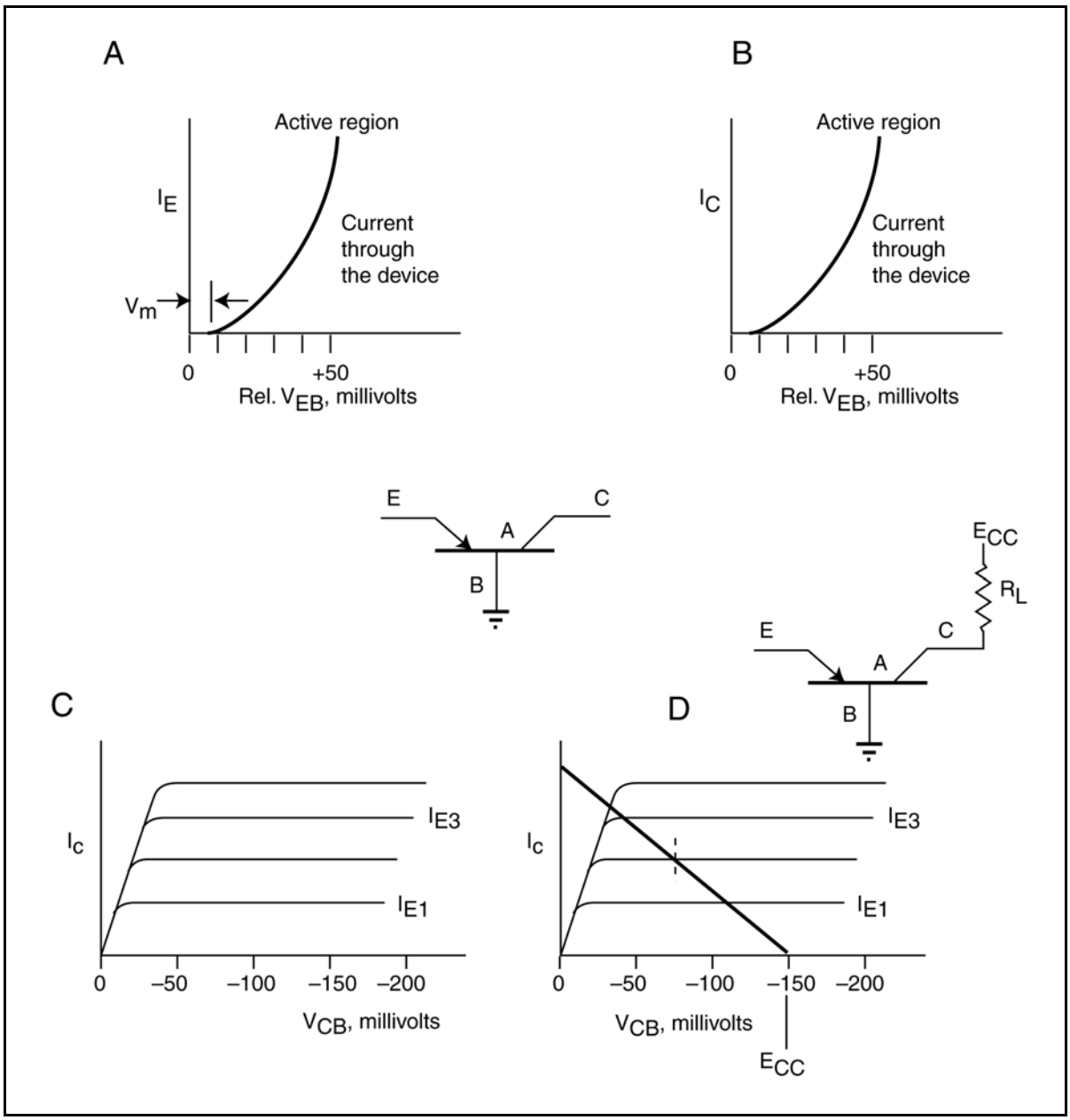

Figure 2.2.4-1 Input impedance and output characteristic of common base configured Activa. See text.

Under the proper bias conditions, and neglecting the small loss of current related to the base current, I_b, the transfer impedance of an Activa is shown in frame **B**. It is identical in form to the input impedance within the operating range of the device.

Reploting frame **B** as a function of the collector to base potential results in a very useful frame **C**, the basic output characteristic of a neuron. It is identical in form to that of a man-made transistor.

If a resistive impedance is in series with the power source supplying the reverse bias to the collector terminal is of finite impedance, the operating conditions applicable to the neuron can be described in frame **D**. For zero current through the device, the potential V_{CB} is equal to the supply potential shown as E_{CC}. For finite currents, the potential V_{CB} is reduced by the voltage drop across the load resistance, R_L, as suggested by the dotted cross. If excessive current is called for by the input potential, a condition called saturation can occur. Saturation occurs when the collector-to-base potential, V_{CB}, falls below the emitter-to-base potential, V_{EB}. At this collector potential, the required bias conditions are no longer met and "transistor action" is lost.

For a typical neuron, an electrostenolytic potential, E_{CC}, near –150 millivolts is used to power the collector of the neuron. The quiescent collector (axon) potential, V_{CBQ}, is typically near –70 millivolts for signal processing neurons. For signal transmission neurons generating action potentials, the quiescent potential, V_{CBQ}, remains near cutoff, –150 millivolts. The operation of the neuron under non-quiescent conditions will be discussed in **Section 2.3**.

The current capability of the neuron can be increased by enlarging the cross sectional area of the Activa. To achieve large increases in current capacity, multiple Activa can be connected in parallel. Arrays formed of individual Activa are commonly seen in electron micrographs. It appears that each Activa is formed by a vesicle pressing one conduit membrane against the other. An electron micrograph showing an equally spaced array of vesicles is frequently indicative of a similar adjacent array of Activa (**Section 2.4.3.3** and the freeze-fracture samples in **Chapter 5**).

The complexity of the electrical circuits within a neuron requires a much more detailed knowledge of the concept of impedance than typically found within the field of chemistry (although the concept does appear in chemical engineering). A large field of electrical engineering has developed to aid in interpreting these relationships, which are frequently non-linear. The many tools of electrical of circuit theory cannot be addressed here. However, it must be pointed out that **Ohm's Law (frequently quoted in the neural literature) is not usually applicable to most neural circuits**. Ohm's Law does not apply to nonlinear circuits or circuits containing an active power source. The broader concepts associated with Kirchoff's Laws must be used. Using Kirchoff's Laws frequently involves applications of Thevinen's Theorem, a theorem allowing the replacement of a set of circuit elements connected in series with an equivalent set of circuit elements connected in parallel. The choice of a set of series or a set of parallel elements may appear arbitrary in the following material. However, Thevinen showed that the two forms are interchangeable if the appropriate rules are followed.

In frame (**D**) of the previous figure, a useful technique was applied to describing the operation of an electrical amplifier composed of an Activa and a finite impedance in series with the device and its power supply. The concept is simple, the current through the collector element and the load element must be equal if they are in series, and the voltage between the collector terminal and ground and the voltage across the load impedance must sum to the power supply voltage. The only point on the graph of the collector current versus collector potential where these two conditions are met is at the intersection of the load line and the operating point of the Activa (the point marked by the dashed cross). It is important to note that there is no requirement that the circuit elements be linear in the above formulation. This is particularly important in neuroscience because very few linear dissipative impedances are found within the neural system. Diodes far outweigh resistors in importance within the neural system.

Kirchoff's Laws will be used sparingly in this section. However, they become much more important in **Section 2.3** where it is frequently necessary to consider combining several nonlinear circuit elements into a single equivalent circuit element. A reader seeking to follow these manipulations in detail must be familiar with Kirchoff's Laws and the other rules of electrical circuit theory.

2.2.4.1.1 Rectification, frequently misconstrued in literature

Two facts, that have been largely overlooked in the literature, are important in experiment design. A diode in the absence of any other electrical component is useless, especially for signaling purposes. Whether a diode is considered a linear element in practice, a logarithmic

signal compressor, or a rectifier depends on the voltage level applied to it and the other circuit elements present. Under small signal conditions, a diode can be considered a fixed impedance. If the signal is larger but its instantaneous value is always either significantly larger or smaller than ηV_T, the circuit is valuable as a signal compressor or expander. This is the primary role of the diodes in the neural system. If very large signals are applied to the circuit containing a diode and the instantaneous amplitude of the signal straddles the voltage ηV_T, the signal appearing across the diode will be significantly changed in shape (distorted). The diode will be acting as a rectifier. In the neural system under *in-vivo* conditions, the absolute potential of all of the signals (which may include a bias component) applied to the diodes are larger than ηV_T. The resulting circuits operate as signal compressors or expanders. It is only under artificial conditions created by man (or unfortunate lightning strikes), either *in-vivo* or *in-vitro*, that the diodes may be driven into the "rectifying" region. In the laboratory, it is important to recognize two facts:

+ that nonlinear amplification, either signal compression or expansion as a function of the applied parameter is the normal condition. This nonlinear amplification can be further described as exponential in most cases.

+ that rectification in the neural system (except in stellate neurons, **Section 2.3.4.5.5**) is due to poor experiment design. Application of test stimuli of more than 100 mV do not emulate actual neural signals and are frequently destructive of the tissue under test.

When investigators observe and speak of rectification in the neural system, it is normally; a property introduced by their test configuration, and a pathological condition. This observation applies to both the static neuron and the neuron under more dynamic conditions discussed in **Section 2.3**.

2.2.4.2 Defining the fundamental conexus within a neuron

To provide the necessary potentials to the emitter and base terminals of the Activa within a neuron, circuits similar to the collector circuits of the previous figure are used, as shown in **Figure 2.2.4-2(A)**. It appears that all of the potentials supplied to the neuron are negative with respect to the surrounding medium. This does not introduce a problem in meeting the bias requirements for transistor action, since it is the absolute differences between these potentials that must satisfy the bias requirements. The specialized chemical process providing these potentials will be discussed in Chapter 4. The vertical line above the frame is designed to focus attention on the physical division of the Activa between two conduit membranes.
.

2.2.4.2.1 Overlay of electronic circuitry and cytology of a neuron

Figure 2.2.4-2(B) begins the process of merging the electrolytic circuitry of the neuron with the conventional morphology and cytology of the neuron. The figure is at a scale that allows the cytology and the electrical topology of the neuron to be compared easily. The shaded areas indicate type 2 areas of the biological bilayer membrane forming the conduits of the neuron. The portion of type 2 BLM normally associated with the poditic impedance, Z_P, is not illustrated as a matter of convenience. The remainder of the conduits are formed of type 1 BLM, except for a small area of type 3 membrane dedicated to supporting carbohydrate metabolism. Both the type 1 and type 3 BLM are intrinsically impermeable to electrical charges and the type 1 BLM is also impermeable to small molecules and all ions. The large areas of type 3 and inert type 1 membrane contribute considerable capacitance to the electrical characteristics of the individual conduit. It is the areas of type 2 BLM that support, and participate in the signaling function. The support is provided by the areas labeled as power sources. The symbology shown is simplified and uses only fundamental electrical symbols. It only shows a diode in series with a small quantum-mechanical battery, with the pair of elements shunted by a capacitance. In the case of the power sources, a more complex arrangement will be developed below (**Section 2.2.6).**. The actual signaling function is shown by the portions of type 2 BLM shown at the two ends of the figure. Here again the symbology is simplified. The base of the diode is shown extending into the exterior space adjacent to the type 2 BLM.

A dashed box has been drawn around the elements of the neuron comprising the complete electrical circuit centered on the Activa within the neuron. This group of electrical elements will

be defined as a conexus. Also shown by the horizontal black bar is the actual size of the region forming the Activa. It is approximately 280 Angstrom wide, a dimension that can only be imaged with an electron microscope.

Figure 2.2.4-2(C) provides a similar image at a lower magnification that allows the morphology of the cell to be compared with its electrical topology. In this frame, the symbology of the Activa using primitives has been replaced by the more compact symbol for an electrolytic semiconductor device, the Activa. Notice the minimal functional role played by the nucleus of the neuron. The role of the nucleus plays an important role in the neuron, but the role is fundamentally metabolic. The area of the conexus remains enclosed in a dashed box. The symbol for the impedance Z_P has been replaced by the symbol for a power source for consistency and an additional terminal is shown within the dashed box. Its role will be developed in **Section 2.3**. Two important features will be developed more fully below. The reticulum found inside most neural conduits describes a demarcation between the relatively liquid, but viscous nature of the core of the signaling conduits and the surrounding material. This material tends to be more complex in chemical and physical character. For the moment, the electrical signal is shown flowing along the "wire" representing the electrical characteristics of the content of the reticulum. The type 2 BLM at the ends of the figure are shown as forming parts of an Activa that could be completed through cooperation with another adjacent neuron. These regions will be developed more completely in **Section 2.2.4.3**.

2.2.4.3 Defining the third operational terminal of & within a neuron

The three-terminal character of the Activa suggests that the neuron is also fundamentally a three terminal device. By exploring the cytology of a neuron in detail, it can be shown that many neurons do in fact exhibit three electrically isolated conduits associated with the internal conexus. This conduit can assume a variety of morphological shapes as will be illustrated below. This additional conduit will be labeled a podite. This conduit shares many common features with the dendrite and the two will frequently be referred to using the generic term neurite.

Recognizing this third fundamental circuit related to a neuron introduces a broad range of additional capabilities not previously explained in the literature. The principle capabilities are two; the ability to generate signal amplification and the ability to invert the electrical polarity of a signal.

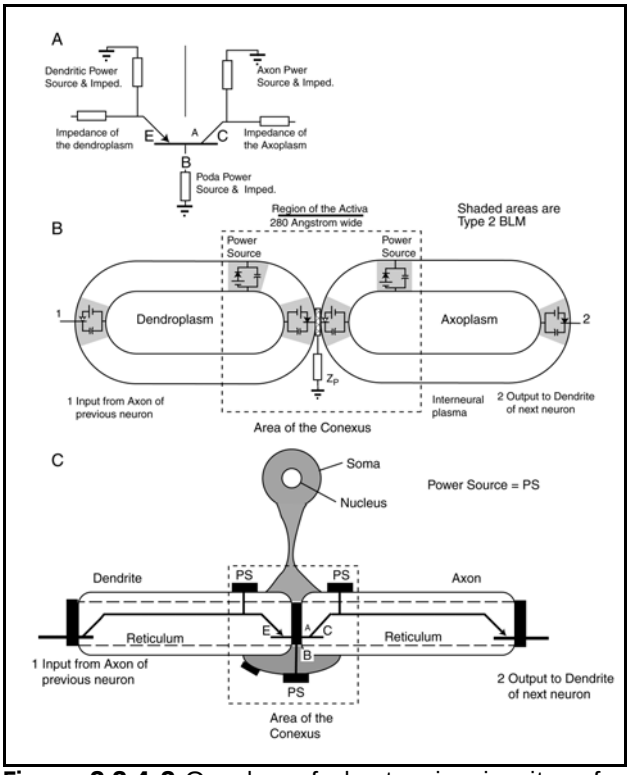

Figure 2.2.4-2 Overlay of electronic circuitry of a fundamental neuron on its topography. See text.

2.2.4.3.1 Defining the additional capability provided by the poditic conduit/terminal

It took only a short time for electrical engineers to discover the transistor, when configured like frame A above, offered an additional useful characteristic. Recall that the equation describing the current through an Activa, like a transistor, is a fixed one based on the quality of the manufactured device. Up until now, the static transfer characteristic has been described in terms of an injected emitter current resulting from a change in the emitter voltage relative to the base voltage (the so-called common base configuration). If the emitter to base voltage is changed by injecting a current into the base terminal, the resulting emitter and collector currents must be much larger than the base current to satisfy the basic current equation.

Whereas the collector current is necessarily slightly smaller than the emitter current in the common base configuration, the situation for the common emitter configuration is quite different. The collector current is typically 100 to 300 times higher than the base current, depending on the intrinsic quality of the device. This represents a considerable current gain (output current at the collector divided by the input current at the base) that can be used to achieve significant signal amplification. The base terminal is described as a high impedance input terminal because of this capability. Only a small current is required to achieve a given (significant) base to emitter voltage change.

Figure 2.2.4-3 presents the transfer characteristic of a common emitter configured Activa. Besides the high current gain exhibited by this configuration, note the inversion of any change in current. A negative going increase in base current results in a positive increase in collector current. The common emitter circuit operates as a signal inverter. The current gain associated with the common emitter configuration is not as uniform as that of the common base configuration. It varies with collector to base voltage. Whereas the dynamic output impedance of this circuit, change in collector voltage divided by the change in collector current (and discussed further in the next section), is about 4,000 megohms, the transfer impedance is much higher. The load line suggests the impedance of the electrostenolytic collector supply is also about 4,000 megohms. The signal gain is about 50:1. These are the numbers for a very small neuron such as might be found within the brain. They suggest how difficult it is to make measurements on the vast majority of individual neurons.

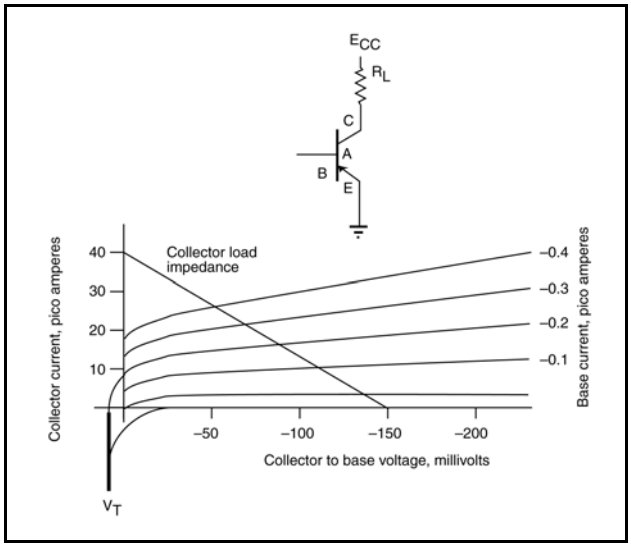

Figure 2.2.4-3 Transfer characteristic of a common emitter configured Activa. Note the inversion of the collector current relative to the base current. Also note the small change in current gain, $\Delta i_C/\Delta i_B$ with changes in collector voltage.

2.2.4.4 Illustrating the neuron using electrical engineering symbology

The nominal neuron found throughout the neural system, with the exception of the stage 1 sensory neurons that are more complex 2-amplifier devices, can be described quite easily using current electrical engineering terminology. Each neuron is a three-terminal device (not a two-terminal device as commonly considered in biology), where the count reflects the number of signaling terminals. In addition, each neuron is supported by two (non-signaling) power supply terminals. The power supply aspects of the circuit are developed in greater detail in **Section 3.2.2**. **Figure 2.2.4-4** shows the roles of glutamate and GABA separated from their historical roles based primarily on their ubiquity relative to neurons and not their functional characteristics. The names glutametergic and GABAergic are obsolete. The terminals of the neuron are more appropriately labeled non-inverting (the dendritic input) and the inverting (the poditic input). And the single axon output. All synapses associated with the dendritic tree introduce signals that are applied directly to the emitter terminal of the Activa within the neuron. All synapses associated with the poditic tree introduce signals that are applied directly to the base terminal of the Activa within the neuron. The roles of glutamate and GABA are separated into their neuro-facilitator and neuro-inhibitor roles (replacing their archaic labels of neurotransmitters). Glutamic acid (glutamate) is shown as being provided by the source of power to the neuron (shown as the triangular amplifier symbol here) with GABA being produced as a residue, along with CO_2, and being drawn off at the drain terminal of the power supply. Every neuron exhibits a positive going, non-inverting, amplifier input and a negative going, inverting, amplifier input. These inputs are unrelated to activity at the source and drain terminals of the neuron. When operating in stage 3 pulse mode (generating action potentials), the neuron's consumption of glutamate and creation of GABA are proportional; and both the consumption and creation are proportional to the pulse rate driving the neuron. This interpretation explains the ubiquitous presence of glutamic acid and GABA throughout the neural system.

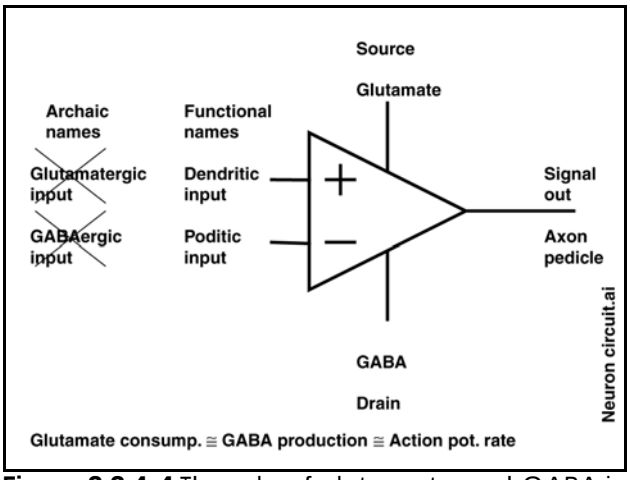

Figure 2.2.4-4 The role of glutamate and GABA in powering the neuron using the symbology of electrical engineering. The signal inputs are labeled +, non-inverting (or excitatory) and –, inverting (or inhibitory) in line with their function. Glutamate is shown as the source of energy to the circuit (neuro-facilitator) with GABA shown as a residue being drained away (neuro-inhibitor). See text.

2.2.5 Preview of forms and amplifier capabilities found within neural systems

The cytological form of neurons is frequently discussed without clear differentiation between potential forms. Similarly, the observed functional performance of a neuron is frequently discussed without taking note of the form of the conexus within the neuron. This section will briefly develop these two subjects.

2.2.5.1 Preview of neuron morphologies using electrolytic theory

Figure 2.2.5-1 illustrates a common labeling of neuron based on their external appearance. The descriptions shown in **A** & **B** have been used forever to indicate the number of arms radiating from the soma containing the nucleus. In fact, the location of the nucleus is irrelevant to the operation of the neuron. Both of these illustrations relate to a fundamental neuron, exhibiting one dendritic tree whose trunk interfaces with the trunk of one axon at an Activa (or array of unit Activas).Based on the number of arms extending from the Activa, these can both be considered bipolar fundamental neurons. The dendritic tree connects to the emitter terminal of the Activa. The axon connects to the collector terminal of the Activa. The signal out of a bipolar neuron is in fact the same polarity as the signal input to the neuron via the dendrite.

Frames **C** & **D** show the next level of complexity in neurons. A separate functional structure, described as a podite is shown. This structure is associated with the base region of the Activa within the neuron. It introduces the signal inversion capability to the neuron. The signal out of the neuron is of opposite electrical polarity as the signal input via the podite.

Frame **C** illustrates what is frequently described as a bi-stratified dendritic tree. It is usually described as having one dendritic tree emanating from the point of the neuron opposite to the axon and a second tree emanating from the rim of the neuron perpendicular to the axis between the first tree and the axon. The position of this second tree is believed to be diagnostic for the poditic input structure. In very complex neurons, it is possible to exhibit multiple trees as in frame **D**, and the generic label multipolar is frequently seen. Alternately, the label stellate (star-like) neuron is frequently encountered to suggest the neuron has multiple poditic trees radiating from a nominally circular soma. The morphological designation, stellate, is unfortunately not indicative of the operational mode of the neuron discussed in the next section.

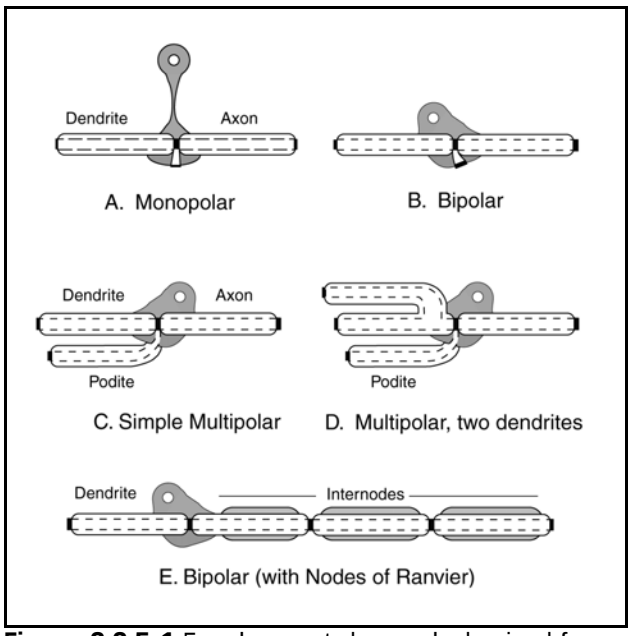

Figure 2.2.5-1 Fundamental morphological forms of neurons.

Frame E illustrates a commonly observed configuration, a stage 3 projection neuron. This neuron is fundamentally a bipolar neuron (one dendritic tree and a poditic contact to the extra-neural matrix) where the axon has been segmented by Nodes of Ranvier. This type of neuron is designed to project neural signals over significant distances (several meters in the case of large mammals). It will be shown that each Node of Ranvier acts as a signal regenerator that eliminates the subject of signal attenuation as a function of distance within the stage 3 neuron. As in the case of the simpler neurons, this neuron can be ramified to include multiple dendritic trees, multiple poditic trees and multiple axons.

By combining the Activa found within neuron with those found between neurons, a complete fundamental signaling path is defined. A signal introduced into the first dendroplasm (or

podaplasm) can be reproduced (in modified form if desired using analog signal processing) at the last axoplasm of the circuit at any desired distance from the source.

2.2.5.2 The fundamental neural signaling path of biological systems

Noback has provided the conventional definition of a neuron shared by many authors. "The neuron is the keystone; it is the *morphologic unit*, the *functional* unit, and the *ontogenetic* unit of the nervous system[40]." While this is a satisfactory introductory definition for pedagogy, it is not scientifically adequate. Shepherd & Koch have recently taken a big step forward by describing the synapse as the basic functional unit of neural circuits[41]. However, their discussion is based entirely on the conventional chemical view of the synapse that is not supported here. They also remain unaware of the Activa within each neuron and the commonality of the conexuses within the soma of the neuron, within the synapses and within the Node of Ranvier. These relationships will be discussed thoroughly in **Chapter 10**. It will be shown that there is a functional unit that is frequently replicated within a single neuron, and between neurons. This replicated conexus is properly defined as the *functional* unit of the neural system, and within the neuron itself. It is the Activa, and its supporting plasma conduits and electrolytic elements, that form the fundamental functional unit, the conexus, of the neural system.

The signal transport role supporting the collection of sensory information and distribution of commands can be described functionally by **Figure 2.2.5-2(a)**. A signal (I_{in}) is delivered to a series of electrolytic conduits as shown. A message related to that signal is propagated along the neural system until it emerges at the output as a signal, I_{out}. This figure highlights the fundamental functional unit enclosed by the small dashed box. This unit includes a junction plus a pre-junction electrolytic conduit and a post junction electrolytic conduit. The following material will show that this fundamental unit can be described as in (b). In this figure, the junction between the two electrolytic conduits may be connected to an additional source of electrical bias. Under the appropriate conditions, the circuit of (b) can be portrayed as in (c). In (c), the junction is portrayed as an electrolytic transistor, known as an Activa, that operates exactly like a man-made transistor.

The configuration of the fundamental functional unit of the neural system in (c) exhibits great flexibility. By varying the associated components and biases, the circuit can be made to operate in a variety of electrically functional modes as suggested by (d), (e) and (f). **Chapters 8, 9** & **16** will develop these capabilities in detail. The generic functional unit of the neural system is best described by frame (f). It consists of an Activa and its associated electrolytic circuit elements. These elements are typically parts of the preceding and subsequent conduits.

---

[40]Noback, C. (1967 The Human Nervous System. NY: McGraw-Hill pg 28

[41]Shepherd, G. (1998) The Synaptic Organization of the Brain, 4th ed. NY: Oxford University Press pg 3

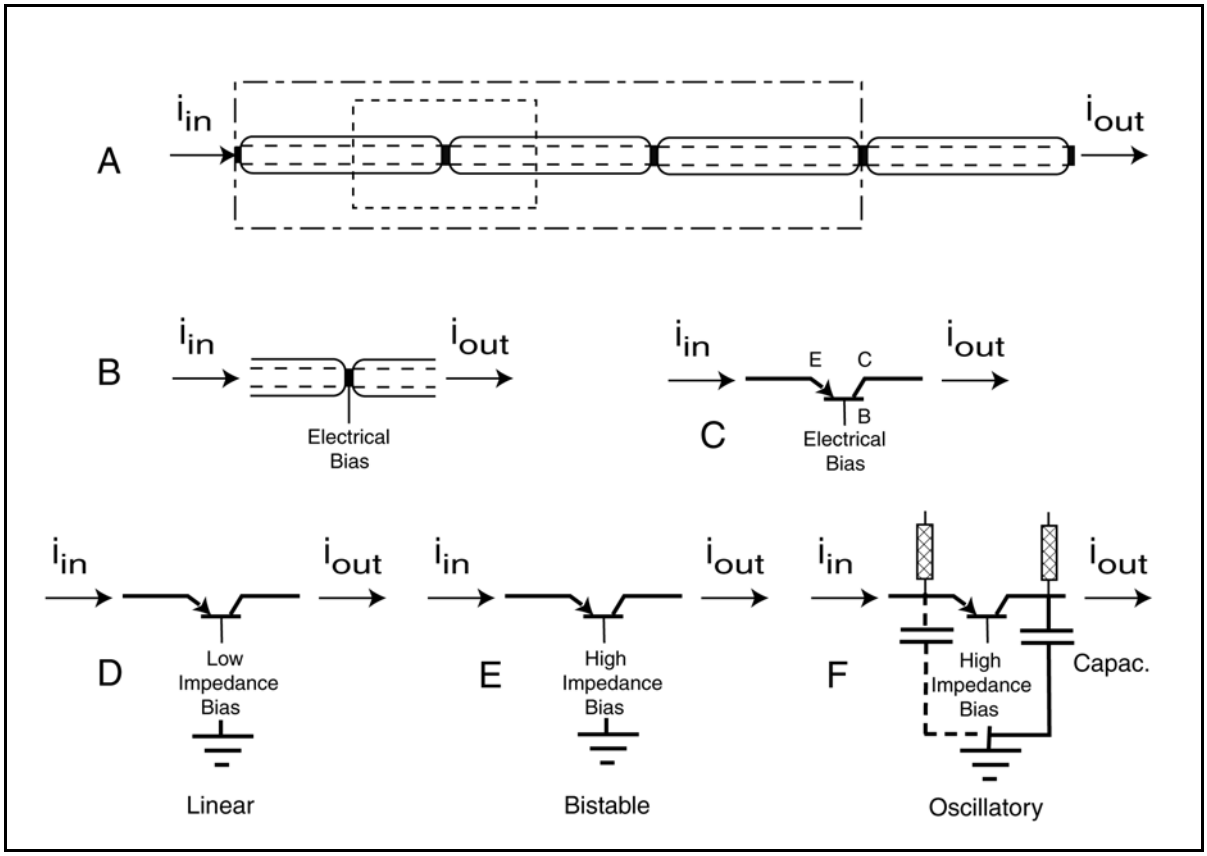

Figure 2.2.5-2 Fundamental functional form of the neuron and its electrical variations. A; the nominal signaling path of the neural system. The inner box encloses a minimal physiological unit (the conexus) of the neural system. The outer box encloses multiple conexuses as typically found within an individual signal projection neuron, a fundamental metabolic unit. B; the Activa within a conexus shown in electro-cytological form. C; the Activa within a conexus shown in standard symbolic form. D, E & F are discussed in the text.

2.2.6 Details of the static electrical properties of neural conduits

Each neural conduit of a neuron is similar in physical construction and composition. It is the auxiliary electrolytic elements that distinguish one conduit from another. These elements consist of various diode derived resistive impedances, a capacitance related most directly to the surface area of the conduit, an electrical power source, and the Activa at each end of the conduit. In the case of the axon, there is also the option of an exterior myelin wrapping designed to minimize the total capacitance of the conduit with respect to the extra-neural matrix.

The total capacitance and the capacitance per unit length of the axon plays a major role in stage 3 neuron operation (**Section 2.6.2.4**).

As noted earlier, the typical lemma frequently exhibits specialized regions associated with the above functional electrolytic elements. These specialized regions generally exhibit the same capacitance values as any other bilayer lemma, but their resistive characteristics can be substantially different.
Because of the significantly different properties of symmetrical and asymmetrical BLMs, it is important to go beyond the description of the cell membrane using averages. The topology of the individual phospholipids may need to be mapped. As a minimum, the degree of electrical asymmetry of each region of the membrane needs to be specified.

The type 1 lemma is symmetrical and always a virtually perfect insulator. The type 2 lemma is asymmetrical by definition.

Normally, the equivalent circuit of the type 2 lemma is characterized by the cathode of a diode being in contact with the "exterior" of a conduit and the anode being connected to the interior of the conduit. There may be exceptions to this orientation in stage 8 cardiocyte cells.

2.2.6.1 Equivalent circuit of the axon element

The electrical characteristics of the axon have been studied the most because of their presumed dominance in the historical common wisdom. It has been due primarily to the ease of access to axons. The dendrites are generally very small structures and the poditic structures have not generally been identifiable through morphology. These structures will be addressed independently in this section.

Over the years, a series of ever more complex two-terminal networks have been presented in the literature that purport to represent the active characteristics of "the axon" or of "the axon membrane." From an analyst's perspective, the proposed networks have gotten out of hand. The original two-terminal network of Huxley et. al. consisted of three current paths and one capacitive path in parallel, each connecting to the "inside" and the "outside" of the plasma membrane. Shepherd shows a total of seven paths[42]. Demir et al. have recently shown eleven independent paths and introduced an unexplained symbol to represent some sort of resistance[43]. Each current path consisted of a battery and a "variable resistor" in series. Subsequent to Huxley et al., the polarity of the batteries frequently varied in subsequent transcriptions, analyses, and expansions of these simple circuits (example, Nickerson & Hunter[44]). These networks have no significance in the world of electrical engineering. They all reduce to a much simpler circuit. Their purpose appears to be strictly pedagogical or at best conceptual and requiring many words to elucidate the actual concept. The original network of Hodgkin & Huxley is shown in **Figure 2.2.6-1(A).** The circuit was highly conceptual at the time and no reason could be found in their papers for the battery in series with the load resistance, R_L. In the original paper, the authors were careful to specify that they were reporting on a membrane. They did not claim to be reporting on a functional neuron, a functional axon, or even an operating axon, in that paper. The variable resistors were seldom discussed in detail. There has been no discussion of what is controlling their variation although Raymond & Lettvin[45] offer the important observation: "It is obvious that g_{Na} and g_K are not two-terminal elements but three-terminal elements; they are governable conductances in much the same way as is any junction transistor . . ." The idea is right, these proposed impedances are typically three-terminal impedances controlled dynamically by an unknown hand.

Figure 2.2.6-1(B) shows a more precise representation of a portion of neural membrane using the *style* of Huxley, et. al. The membrane is represented on the right as consisting of a single conductive path and a single capacitive path. The conductive path consists of a diode and a battery in series. The symbol, i_{diff} represents a conventional current entering the plasma through the membrane; the symbol, e_{diff}, represents the equivalent electron current flowing out of the membrane from the plasma. In this representation, the circuit on the left represents both the electrostenolytic source biasing the plasma to a negative potential and the load impedance. The load impedance is shown as external to the equivalent circuit of the

---

[42]Shepherd, G. (1988) Neurobiology, 2nd ed. NY: Oxford Press Pg. 114

[43]Demir, S. Clark, J. & Giles, W. (1999) Parasympathetic modulation of sinoatrial node pacemaker activity in rabbit heart: a unifying model *Am J Physiol Heart Circ Physiol* vol 276, pp H2221-H2224

[44]Nickerson, D. & Hunter, P. (2010) Cardiac Cellular Electrophysiological Modeling *Cardiac Electrophys Meth Models*, Part 2, pp135-158

[45]Raymond, S. & Lettvin, J. (1978) Aftereffects of activity in peripheral axons as a clue to nervous coding. In Physiology and Pathobiology of Axons, Waxman, S. Ed. NY: Raven Press pp. 203-225

membrane alone. There are problems with both of these representations. In (**A**), no means is provided to determining the value of the individual resistances although it is stated that they vary with time and the membrane potential. This statement implies that there must be other elements to the circuit.

(**B**) is more explicit in defining the membrane as an impedance, Zm – a diode, in series with a voltage, E_m., both shunted by the intrinsic capacitance of the lemma. These are intrinsic parameters of the bilayer membrane. There are no undefined variable impedances. However, it does not separately identify the different types of lemma present. The circuit on the left represents the electrostenolytic process biasing the axoplasm of the complete neuron. It includes both the load impedance and a battery. The battery potential, V_{sten}, is normally much higher than the intrinsic potential, E_m, of the membrane. The electrostenolytic source is the subject of **Chapter 3**.

The above representations are incomplete. The actual operation of the axon compartment can be understood using a more complete end view of an axon shown in (**C**). This frame segregates the membrane of an axon into four identifiable regions shown here as quadrants separated by the lines at 45 degrees.. Two of the regions are normally in contact with the extra-neural matrix. The other two are not. In the latter case, each of the regions is in intimate contact with another conduit of the neural path. When biased properly, these two conduits constitute an Activa and exhibit "transistor action." The emitter terminals on the left appear as diodes in series with an impedance, Z_P. Any change in current, I_{in} ,resulting from a potential, V_{in}, will result in an equal change in current to be injected into the axoplasm causing a depolarization. This depolarization of the axoplasm will cause a change in the current flowing out of the axoplasm through the right Activa. Simultaneously, the electrostenolytic supply will begin to cause current to flow out of that channel to restore the quiescent condition.

It is important to note the pure capacitance in the upper quadrant. A majority of the membrane of any conduit is type 1 lemma and not designed to pass any current. The lower region represents a key element of the overall axon. Like the lemma in the left and right quadrants, the lemma is type 2. Although the membrane itself appears much the same visually as the type 1 lemma, it is intrinsically and functionally different. The membrane exhibits a finite impedance and an intrinsic membrane potential as shown. This portion of the membrane, when coated with an electrostenolytic material, can introduce an electron flow into the axoplasm by electrostenolytic action. This current will generate a voltage across the combination of all of the current paths represented by the various lemma. There is a source impedance associated with this electrostenolytic source. This impedance is the load impedance of frames (**A**) and (**B**).

The relationship between the electrostenolytic source, the source impedance and the net impedance of the diodes in parallel determines the <u>quiescent potential</u>, or resting potential, of the axoplasm. To a large extent, it is this axoplasm potential that is measured in experiments.

If the overall circuit in (C) is disturbed by connection to a test set, the quiescent potential and any changes in current flow must be evaluated by adding the test set equivalent circuit to the electrolytic configuration in frame (C). Hodgkin and Huxley reported that the impedances, which they showed as resistances in frame (**A**), varied with the potential of the plasma. It will be shown this is exactly what is expected of the network of frame (C). In their early papers, they did not address the question of whether their calculated impedances were due to the static or dynamic characteristics of the equivalent diode.

It becomes obvious from frame (C) that the method of sample preparation plays a large role in the measured characteristics of a single section of neural conduit, whether it is called an axon, a dendrite or a podite.

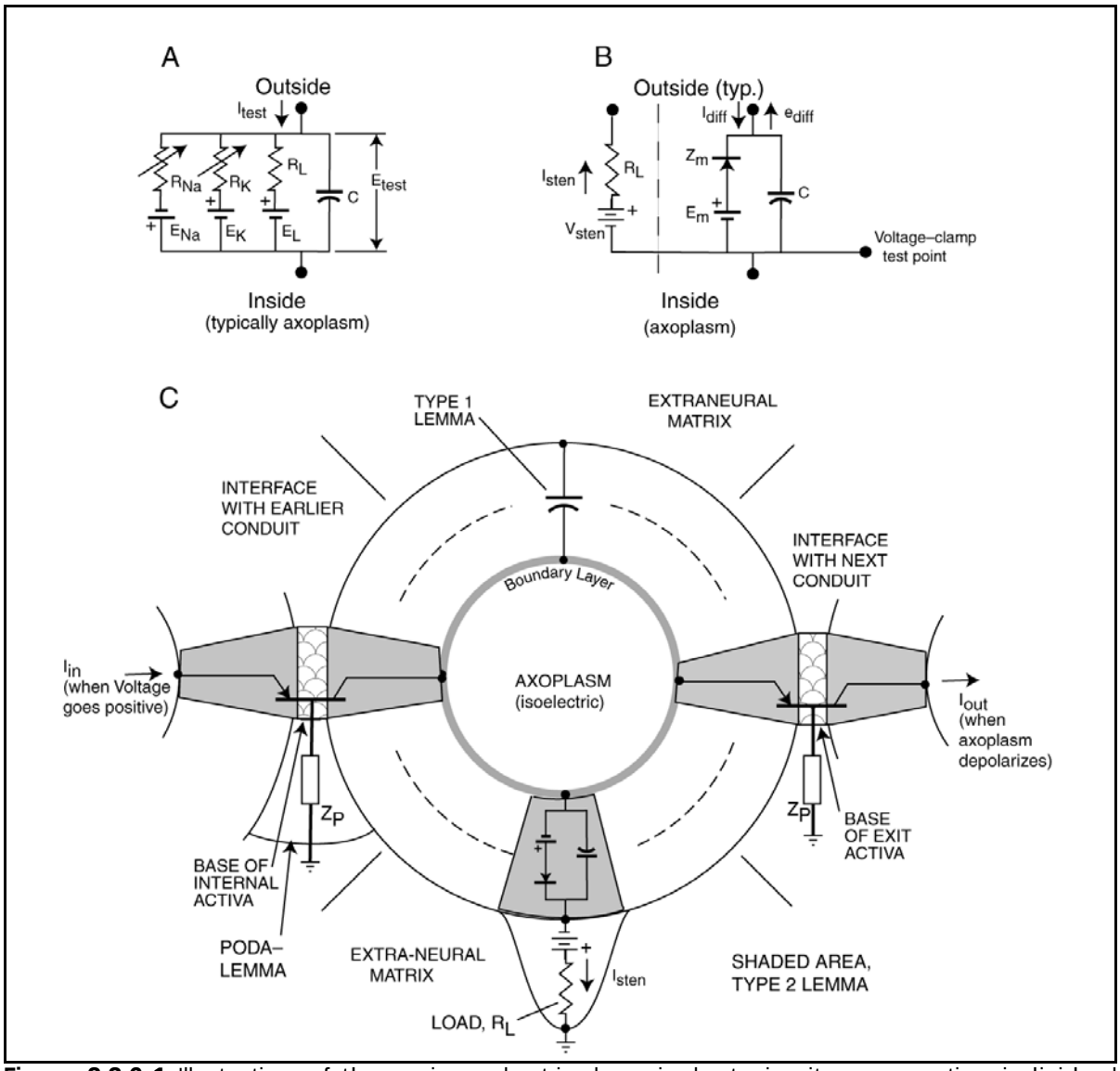

Figure 2.2.6-1 Illustration of the various electrical equivalent circuits representing individual specialized regions of the axolemma. A; the 2-terminal equivalent circuit of the isolated axolemma based on the constrained analysis of Hodgkin & Huxley and others. B; the more general network associated with the axolemma that can be used in several specific applications. C; a composite representing a longitudinal cross section of an axon before it has become extended horizontally. The boundary layer between the axolemma and the axoplasm is needed to properly understand the operation of the conduit. The Activa on the left represents the internal connection with a dendrite. This region of the axolemma is of type 2. Conventional current is injected into (electrons actually leave) the boundary layer by transistor action. [all arrows in frame C represent conventional currents]. The Activa on the right represents the synaptic connection with an orthodromic axon segment or dendrite. This region of the axolemma is of type 2. Conventional current leaves (electrons actually enter) the boundary layer by transistor action when the axoplasm depolarizes. The capacitance at the top represents the type 1 membrane used for a majority of the axolemma surface. The network at the bottom represents the type 2 membrane region used to polarize the axoplasm combined with the electrostenolytic source (battery). A conventional current leaves the boundary layer when the axoplasm becomes depolarized. The axoplasm remains iso-electric through out the process due to the mutual repulsion among the electrons within the axolemma.

2.2.6.2 Equivalent circuit of the dendritic element

2.2.6.2.1 Background literature

Describing the electrical circuit of the dendrite is complicated by the extreme variation in its topography. Stuart, et. al. have recently edited a broad discussion of the dendrite[46]. It continues the policy of discussing the morphology and chemical functions of the dendrite while only discussing its signaling function from the most global perspective. This work takes exception to their basic premise on page 232 that "The action potential is the final output signal of most neurons." As will be discussed in Chapter 9, less than 5% and probably less than 1% of all neurons have action potentials as outputs. Only projection neurons in **stage 3** generate action potentials.

The complex topography of the dendrites, and frequently the podites as well, leads to difficulty in determining the electrical topology that best describes the element. For the longer uniform stretches of dendrite, it can be modeled as a distributed transmission line similar to equivalent structures of an axon. Where branching is prevalent, it is more useful to represent each branch as a lumped equivalent of the distributed parameters. In both cases, the conduits are unmyelinated and the capacitance per unit length dominates, but do not eliminate, the inductance per unit length (**Chapter 9**). Segev & London have reviewed various dendrite models in Chapter 9 of Stuart, et. al. Segev & London have followed the approach of Rall[47], who ignored any inductance present. Rall typified the approach used from 1900-60. The dendrite is modeled as a cylinder but it is studied by a patch approach where only the resistive and capacitive parameters of the cylinder wall are recognized. The second order Euler (alternately Cauchy) equation is reduced to a first order differential equation with constant coefficients. The result is an infinite series solution to a wave equation instead of a closed form solution based on sinusoids. It is suggested that a more conventional electrical circuit theory approach to this problem would provide better results in a closed form. This would be particularly true with regard to the excessively long time delays predicted by their approach. At the impedance levels involved, the impedance of the various inductances is much smaller than the resistances they shunt.

In the absence of a complete circuit model for the neuron, Segev & London struggle with the mechanism of signal amplification in the neuron. Although they do not define the soma specifically, they appear to be treating it morphologically as the portion of the cell other than the dendrites and axons. They do speak of the source of the action potential as occurring at generally unspecified locations internal to the soma.

Segev & London have made considerable progress in recording the steady state electrical properties of the dendrites, and sometimes relative to the associated axon. However, the asymmetrical waveforms shown for the response to a simple pulse in their dynamic signal experiments all suggest significant impedance problems in their test configuration due to the high impedance levels.

The above assumptions have a major impact on the seven insights, based on the passive (RC) cable model, presented in their paper. By recognizing the presence of inductance in the dendritic circuits, time constants at least one or two orders of magnitude lower would be calculated. Similarly, the voltage attenuation for dynamic signals would be considerably lower. Finally, the time delays based on an RLC circuit, where the R is usually negligible would lead to much lower time delays within the dendrites. By recognizing the presence of an Activa within their soma, operating in the current summation mode, their comments about window duration for signal summation take on a different meaning.

---

[46]Stuart, G. Nelson, S. & Hausser, M. (1999) Dendrites. NY: Oxford Press

[47]Rall, W. et. al. (1959-92) Extensive bibliography in Stuart, et. al. Op. Cit. pg 228-229

2.2.6.2.2 Equivalent circuit in this work EMPTY

Because of the much higher transit velocity for dendritic signals deduced from other works, typically 40 times higher than in Segev & London, and the short physical distances involved, it is best to consider the fundamental dendrite as a set of individual coaxial cylinders. The intrinsic inductance and capacitance of such a structures is easy to calculate.

Once a an equivalent dendrite circuit is obtained by combining the set of coaxial cylinders, an equivalent circuit much like [**Figure 2.2.6-1**] can be drawn, by changing axoplasm to dendroplasm and interchanging the titles of the Activa on the left and right. The "base of exit Activa" becomes the base of input Activa and moves to the left. The "base of internal Activa" and the line marked podalemma move to the right. In most cases, the battery associated with the load, R_L, is very small or negligible in the dendrite case..

2.2.6.3 Equivalent circuit of the poditic element

As seen in the above figure, the cytological structure of the poditic conduit is somewhat different from that of the dendrite and axon. The podaplasm occupies the remainder of the plasma within the exterior membrane that is not isolated within the dendritic or axonal conduits and not isolated as part of the nuclear system. As shown, there is a specialized region of the podalemma for purposes of the electrostenolytic process. It is shown as the horizontal black bar similar to the horizontal black bars associated with the electrostenolytic terminals of the dendrite and the axon. The diagonal black bar on the surface of the podalemma indicates a potential specialized zone for purposes of receiving a neural signal. This site will be discussed in **Chapter 9**. Prior to complete genesis of the cell, the podaplasm occupies the space between the dendritic and axonal conduits. As these two conduits become juxtaposed, the space between these two structures becomes very small, typically 50-100 Angstrom. The majority of the chemical species of the podaplasm are forced out of this area by the rules of Brownian Motion. The remaining species is believed to be water in the form of a liquid crystal, known as semi-metallic water.

Figure 2.2.6-2 describes the cytology and individual electrical equivalent circuit of the poditic portion of the neuron. The input and electrostenolytic interfaces are the same as for the dendrite and the axon. However, the output configuration is different. The podaplasm is in direct contact with the base region of the internal Activa of the neuron. If there is a boundary layer between the podaplasm and the base region, it appears to provide an Ohmic electrical contact (a finite and symmetrical resistance) between the two. This allows electrons to flow from inside the podalemma into the base region of the Activa. This flow is shown by the arrow with the asterisk for a point.

The electrostenolytic potential shown in series with the load, R_L, may be very small or negligible in the poda circuit (except in the case of the cardiocytes (**Section 2.7.4**).

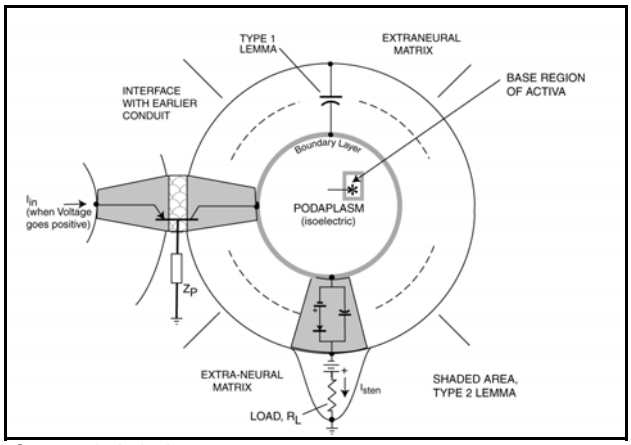

Figure 2.2.6-2 Electrical equivalent circuit of the poditic conduit. The base region of the Activa is typically surrounded by the podaplasm. Other contacts to the base region are out of plane. Any boundary layer surrounding the base region is Ohmic.

2.3 The electrical characteristics of the dynamic (*second order*) neuron

The structural characteristics of the static (first order) and dynamic (second order) neurons are largely the same. However, the electrical characteristics are spectacularly different. This is partly due to the introduction of unique configurations of circuit elements within an individual conexus.

When the independent electrical conduits of the neuron are brought into a unique juxtaposition (spacing of less than 100 Angstrom between type 2 lemma areas) and electrically biased in a specific way (axoplasm negative, and dendroplasm positive with respect to the podaplasm), they exhibit properties uniquely related to their juxtaposition. The resulting inter-coupled structures exhibit "transistor action." Through this mechanism, the neuron is found to contain an active electrolytic semiconductor device, named an Activa. It is this Activa that is key to the dynamic operation of the entire neural system.

2.3.1 Background drawn from electrical circuit theory

With recognition of the electrolytic character of the neuron, many additional tools become available for understanding the operations of the neural system. Some of the ideas introduced in this section will be expanded upon later.

2.3.1.1 The interconnection of neural circuits

Electrical engineers have encountered two elementary problems in developing electrical circuits. First how are multiple circuits provided electrical power economically. Second, if multiple circuits are directly coupled, how do you overcome the tendency of the output signal of the last circuit to approach the voltage extremes defined by the power supply capability (the walk-off problem). In early electrical circuits (1910-1920), circuits were frequently provided with individual battery-based power supplies. This became unwieldy and efforts were made to consolidate the power supplies. This complicated the second problem; how to minimize the tendency of the quiescent signal levels to approach the limits set by the common power supply and severely limit the dynamic range of the circuit. This was solved by introducing one or more capacitors or transformers between selected pairs of circuits to electrically isolate their quiescent potentials.

The neural system encounters the same two situations but treats them differently. First, it does employ individual chemically-based power supplies for each neuron. Although it maintains direct circuit coupling among the analog circuits used throughout the system, it takes advantage of the phasic properties of stage 3 neural amplifiers interspersed strategically throughout the system, to overcome the walk-off problem associated with multiple direct coupled stages.

Figure 2.3.1-1 illustrates the result. A nominal potential is an elusive concept in the neural system. The figure shows the quiescent point and operating range varies widely among neurons depending on their assigned task. The reason for the different quiescent points is to simplify the transfer of a signal from one neuron to the next. As noted above, quiescent potential and the dynamic signal voltage at the output of a neuron affects the quiescent potential and signal voltage applied to the next neuron via the synapse. In fact, if the correct potentials are not maintained at the collector of a neuron, the subsequent synapse may fail to exhibit "transistor action" and the signal may not pass through the synapse at all. Abnormal collector (axoplasm) potentials (even among only a few neurons out of groups of millions) lead to a wide range of neurological disorders (diseases).

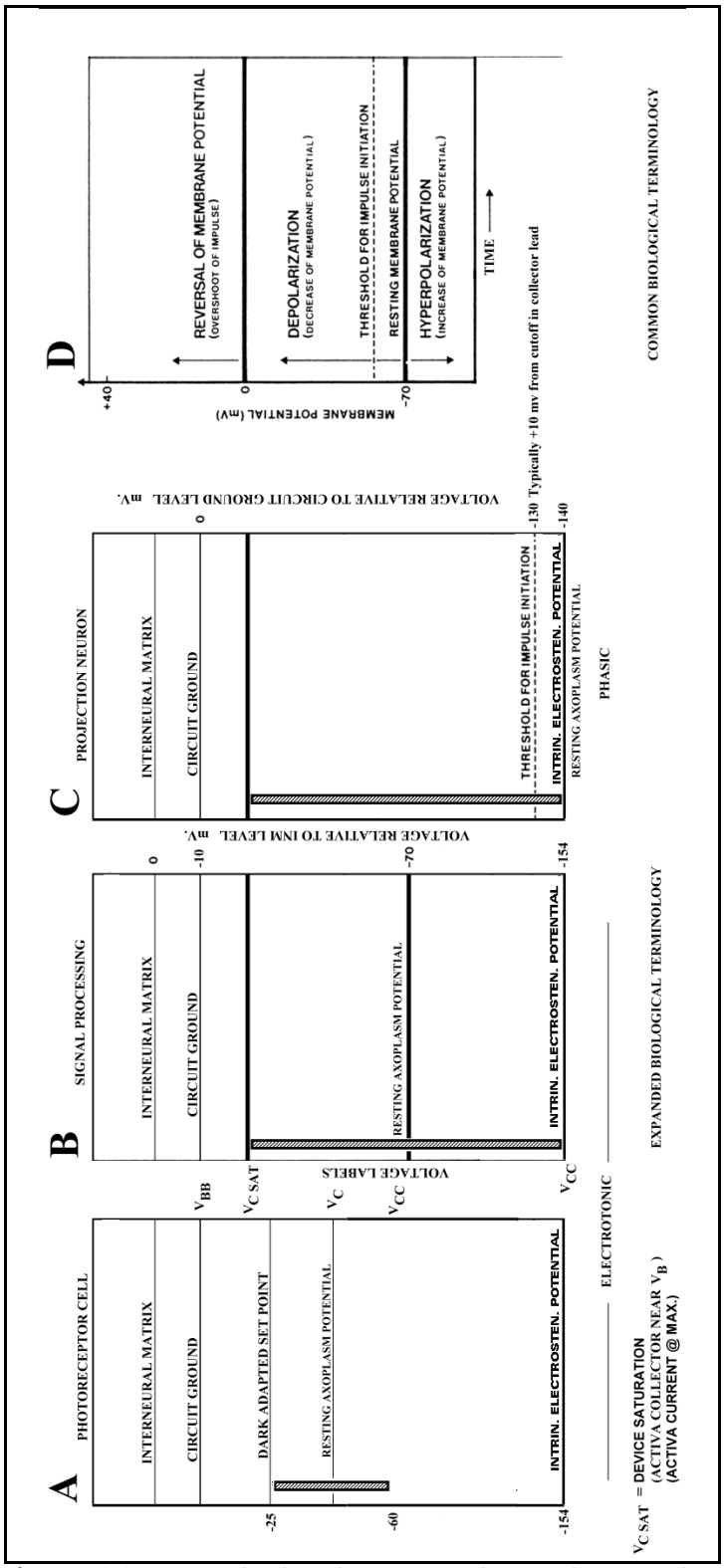

Figure 2.3.1-1 Typical quiescent point and operating range of various neurons. See text..

The figure provides the correlation between the historical electrophysiological terminology and a broader terminology consistent with the actual situation and normal electronic circuitry. Frame D of the figure is based on a

figure from Ottoson[48]. It is clearly a composite figure. The left-hand scale of this frame makes it clear that it is the voltage of the surrounding interneural matrix, INM, that is actually used as the reference in most physiological work.

The most frequent nomenclature is defined in terms of the commonly defined "resting membrane potential." This potential is actually the quiescent axoplasm potential. The most negative potential associated with a cell is actually the intrinsic electrostenolytic potential, V_{CC}. While this potential is closely associated with the axoplasm, it is distinctly different from the intrinsic potential of the membrane. The intrinsic membrane potential is measurable in a Langmuir apparatus and tend to be less than 10 mV. The intrinsic electrostenolytic potential is usually considerably more negative than the intrinsic membrane potential. It is also generally more negative than the quiescent axoplasm potential unless the Activa associated with the plasma is in the cutoff condition.

The resting axoplasm potential of a neuron need not be at or near –70 mV. It can vary significantly determined by three circuit parameters. The intrinsic electrostenolytic potential is determined by the reactants participating in the electrostenolytic process on the surface of the axolemma. The quiescent or resting axoplasm potential is reduced by the currents flowing in the circuit. This reduction is due to these currents flowing through the source impedance of the electrostenolytic process. The magnitude of these currents is determined primarily by the collector current of the Activa associated with this plasma. It is also a function of any current being injected into the next dendrite at the synapse. The resting potential of the neuron is unrelated to the Nernst Equation, even as modified by Donnan and eventually Goodman.

Frames A, B & C of the figure present an expanded terminology and nominal potential profile applicable to the different types of functional neurons. These three profiles discriminate between the ground potential of the INM and the circuit ground of the individual type of neuron. In many cases, the circuit ground is a few millivolts more negative than the INM ground due to the intrinsic membrane potential of the poditic membrane and the impedance of the INM. Frame A represents the typical sensory receptor neuron. Its dynamic range, of only about 35 millivolts, is less than most other cells. The distribution Activa of the cell has a quiescent current in the dark which is defined as the dark adapted set point. It also exhibits an average current in response to illumination that is shown as the resting axoplasm potential. Frame B describes the potentials found in the signal processing type of neuron. The resting axoplasm potential is near the intrinsic electrostenolytic potential of the photoreceptor cells. The large signal voltage swing capability of the signal processing cell is shown by the vertical bar.

Frame C represents the typical signal projection neuron (including the hybrid neurons such as the ganglion cells of stage 3). Under resting conditions, the Activa within these cells is in cutoff. The resting axoplasm potential closely approaches the intrinsic electrostenolytic potential under the cutoff condition. The critical threshold condition of the emitter to base circuit is shown transposed to the output circuit and labeled the threshold for impulse initiation. The large signal voltage swing associated with action potential generation is shown by the vertical bar. The collector current of the Activa reaches saturation at the peak of the action potential. Saturation usually occurs at about +20 mV from the interneuron matrix surrounding the neuron. 20 mV is the typical saturation voltage of the Activa within the neuron.

The intrinsic electrostenolytic potential for the signal processing and signal projection neurons is normally in the region of –142 to –154 mV relative to the interneural matrix. A broader discussion of this figure will be found in **Chapter 3**. As an aside, the resting plasma potential in a cell from the algae, *Nitella*, was measured as –138 mV at 20 C. This value would suggest the intrinsic potential of a wide variety of animal and plant cells was in the –138 to –150 mV range at 20 C. As the chemistry involved appears to be fixed, the variation is more likely due to experimental technique than differences in the actual intrinsic value.

The data in the literature requires careful interpretation. It is not normally associated with a specific type of neuron and it generally uses the old, less precise, terminology. Neumcke et. al. have provided a number of potentials with respect to temperature. The resting axoplasmic

---

[48]Ottoson, D. (1983) Physiology of the nervous system NY: Oxford University Press. pg.. 56

potential in myelinated frog neuron is given as –71 mV @ 17 C and –50 mV @ 21 C[49]. In a separate paper, a resting potential of –78 mV was assumed and used as a clamp voltage. The so-called, but misleading , Na equilibrium potential is given as –152 mV @ 20 C and –144 mV @ 37 C[50]. These latter values are clearly the intrinsic electrostenolytic potential of the axolemma of a neuron biased for action potential generation. Schwarz & Eikhof[51] have provided additional numerical data concerning the transient performance of such neurons. However the *model* used to explain their *data* is in conflict with the model of this work. They discuss the "run down" that occurred within a period of 30-50 minutes. This run-down is to be expected if the reactants required by the electrostenolytic process (see **Chapter 3**) are not supplied by diffusion within the cardiovascular system supporting the neurons (or the *in-vitro* bath).

By comparing these frames, it is seen that only the signal processing neurons exhibit hyperpolarization, the movement of the axoplasm potential to a more negative voltage than its quiescent or resting value. This hyperpolarization is the result of a positive signal applied to the poditic (inverting) input to the neuron. Depolarization is a common occurrence in all three neuron types. The reversal of the axolemma potential relative to the INM is unusual. Its observation is usually caused by the capacitance introduced by the test set rather than by the *in-vivo* neuron. It is sometimes cause by the test set reference ground not corresponding to the extra neural matrix near the neuron.

The voltage of the dendroplasm and podaplasm must also be addressed briefly although very little data appears in the literature. Segev & London have recently provided data related to the potentials of the dendrites and the soma (?) that will be addressed more fully in **Chapter 6** (**Sections 6.3.2** & **6.3.10**). The instantaneous difference in potential between the dendroplasm and the podaplasm (both measured at the Activa) determines the emitter to base voltage of the Activa within the neuron. The quiescent value of this difference determines the operating mode of the Activa, whether it operates electrotonically or generates action potentials.

2.3.1.2 Analog (electrotonic) versus pulse (phasic) operation

Any active device when supported by other electrical elements is intrinsically unstable. The definition of an active device is one that converts part of a constant source of power into a varying output signal that exhibits more power than the original input signal. If a sample of this output power is transferred back to the input circuit (in the correct phase), the output signal will be increased even more by the amplifier until a nonlinearity limits the signal growth. This growth in output can occur even if the original input signal is removed. Increases in output power by this means is described as oscillatory if it becomes continuous. If it terminates after a single pulse of energy, it is called phasic. The conexus within a neuron qualifies as an intrinsically unstable circuit.

The intrinsic instability of the conexus within a neuron results in three distinct conditions. The first condition is a normally stable circuit exhibiting amplification but no oscillation. This is described as analog or electrotonic operation. The second condition is a normally oscillatory circuit resulting from amplification. It can be described as oscillatory (continuous output pulses) or phasic (individual output pulses in response to an input signal). The third condition is also important. It is caused by the instrumentation of a investigator changing the operation of the conexus from the first or second condition. This change is frequently caused by the addition of capacitance to the circuit due to the capacitance of the probe.

All three of the above circuit operating conditions are commonly found in neuroscience research.

---

[49]Neumcke, B. (1983) The myelinated nerve: Some unsolved problems, Experientia, vol. 39, pp. 976-979

[50]Neumcke, B.& Stampfli, R. (1982) Sodium currents and sodium-dependent fluctuations in rat myelinated nerve fibres. J. Physiol. vol. 329, pp. 163-184

[51]Schwarz, J. & Eikhof, G. (1987) Na currents and action potentials in rat myelinated nerve fibres at 20 and 37 C. Pflugers Archive--European Journal of Physiology. vol. 409, pp. 569-577

2.3.1.3 Types of oscillators found in the neural system

The neural system uses a number of different oscillator circuits in order to efficiently transmit signals over relatively long distances, a few millimeters from a device with dimensions of a few microns. These oscillators are of the relaxation oscillator class. Oscillators can be described based on the types of electrical elements used to form them. Every simple (lumped parameter or lumped constant) oscillator employs two types of electrical elements, a dissipative (resistive) element and a reactive element. The reactive element can be either a capacitance or an inductance. More stable and precise lumped constant oscillators can be formed using all three of the above elements but these are not found in neural systems. The expression lumped parameter refers to the fact that all of the individual impedance is concentrated at one location and can be described by one parameter.

In addition to lumped parameter oscillators, one type of distributed parameter oscillator has been attributed to the neural system conceptually. This is the delay line type of oscillator. In the biological literature, this type of oscillator has been occasionally been described as a syncytium (sin-sish'-e-um). This oscillator employs a repetitive series of reactive and resistive elements to achieve a significant delay in a sample of the output signal that is fed back to the input terminal of the Activa(s).

The predominant form of neural oscillator is the relaxation oscillator formed from resistive and capacitive elements in lumped parameter form.

2.3.1.4 Electrical feedback as a powerful (but poorly understood) neural mechanism

The neuroscience literature contains occasional references to feedback, but primarily in a conceptual context. Randall et al. illustrate *external* feedback in a manner that is difficult for the uninitiated to understand (page 12). A simpler presentation shows the input to a circuit on the left and the output on the right with the feedback shown as an overlay passing a sample of the output back to be summed (positive feedback) or differenced (negative feedback) with the input signal..

Feedback is the technique of extracting a sample of the signal at the output of one or more circuit stages and returning it to an earlier stage. The sample need not be electrical in form at all points. In larger scale feedback loops (such as that involved in imaging the exterior world by redirecting the eyes) it is not even necessary for the feedback loop to be *physically* closed. The sample need not be delivered by an external circuit. It can be delivered by an internal circuit even at the elementary three-terminal neuron level.

Two distinct forms of feedback are found within electrical circuits. Two similar implementations of the concept are found in chemistry.

> The presence of reaction products in the vicinity of a reaction site frequently limits the reaction rate in a chemical reaction. This is a form of *external* feedback.
>
> Similarly, in a two step chemical reaction, the concentration of a necessary intermediary within the reaction volume is a controlling factor on the reaction rate. The requirement for an intermediary is a form of *internal* feedback. Remove or change the concentration of the intermediary and the overall reaction rate changes regardless of the concentrations of the original reactants or of the reaction products.

Both internal and external feedback play major roles in the operation of the neural system. External feedback rarely involves an exclusively electrical feedback path. Randall et al. have described external feedback to the exclusion of internal feedback[52]. Except for some paths associated with the muscles, external feedback is a global phenomenon with the feedback path involving one of the sensory modalities; the physical disturbance of a hair after an arm is moved, an acoustic vibration generated by the mouth and sensed auditorially, the movement

---

[52]Randall, D. Burggren, W. & French, K. (1997) Eckert Animal Physiology, 4th Ed. NY: Freeman page 12

of an object within a visual scene caused by the motion of the head, etc. Internal feedback is far more common than external feedback. It is associated with the finite impedance of the poditic circuit of virtually every conexus. Since any poditic impedance is shared between the collector-to-ground and the emitter-to-ground circuits, it creates an internal feedback signal routinely. Any collector current passing through the poditic impedance necessarily generates a voltage that is inserted into the emitter- to-ground circuit. This voltage will cause a change in the emitter current causing the collector current in the first place. It will be shown below that the character of this poditic impedance frequently determines the overall character of the conexus circuit.

The results associated with internal feedback depend strongly on the character of the feedback impedance. The use of a pure resistance generally affects only the overall gain (output signal level divided by input signal level) of the circuit. However, the introduction of a reactive component in parallel with the resistive element can cause many other useful changes in the output signal relative to the input signal. The use internal feedback dominated by the reactive component is generally required to achieve oscillation.

2.3.2 The three-terminal Activa provides great circuit flexibility

Transistor-action associated with the Activa within the conexus of a neuron introduces previously undocumented performance capabilities into the neural system. As incorporated into a conexus, the three-terminal Activa provides all of the capabilities associated with the equivalent man-made transistor. This section will describe some of the basic circuits that can be recognized in neurological systems and explain the basis of their operation.

The three-terminal form of the Activa leads to the description of the conexus and the neuron as fundamentally three-terminal, *not two-terminal*, devices. In many cases, it will be appropriate to separate each of the three terminals into two sub-terminals related to the signaling function and the power supply function. In a few complex neurons, additional or alternate terminals can be defined based on multiple conexuses occurring within one neuron. **Figure 2.3.2-1** annotates these additional terminals. The supply potentials are shown in their normal relationships to support transistor- action. V_{ds} is more positive than V_{ps}, and V_{as} is more negative than V_{ps}. The signal inputs and outputs are shown undefined. The input signals are usually derived from the collector terminals of synapses. The output characteristics of these synapses define the voltage and impedance that should be shown connected to these points. The output signal normally goes to the emitter terminal of one or more synapses. The input characteristics of these synapses (combined into a single equivalent circuit using Kirchoff's laws if required) define the voltage and impedance that should be shown connected to this point.

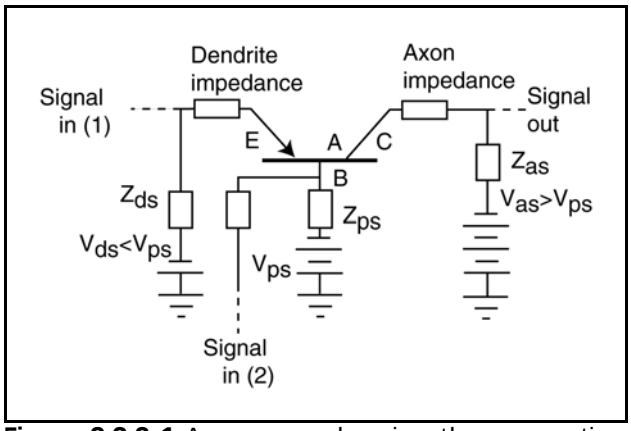

Figure 2.3.2-1 A conexus showing the separation of signal and bias terminals along with the impedances associated with both the power supplies and the plasma conduits. Two distinct signal inputs are shown. The poditic impedance in the second input lead is not labeled.

The complication of showing the input and output characteristics of the adjacent (frequently multiple) circuits is an unfortunate feature of directly connected circuits. It is usually eliminated in man-made circuits by introducing a capacitance into each of these paths. The capacitance effectively isolates the absolute (or average) voltages related to one stage from the adjacent stages. Only the dynamic voltage (or current) representing the signal is passed between the stages.

By combining the properties of

these circuit elements discussed in **Sections 2.2** & **2.3.1**, with available laboratory measurements, the operational characteristics of complete individual neurons emerge. However, two major classes of neurons need to be distinguished based on the complexity of the electrical network forming the conexus around the Activa. As introduced in [**Figure 2.2.5.2**], these classes differ in the relative value of the impedance found between the base terminal of the internal Activa and the surrounding INM (local ground in electrical engineering language). If this impedance is negligible, the resulting neuron forms a simple amplifier. The form of the signal component of its output is generally a copy of the signal applied to its input. However, if the value of this impedance is significant, a world of new opportunities arises. These opportunities include the option of introducing a second signal into the circuit via the poditic terminal. It also includes the opportunity to convert the circuit into an oscillator.

The following discussion first addresses operation of the simple amplifier using only resistive circuit elements (predominantly the local dynamic impedances of diodes). These circuits are frequency independent. The discussion then addresses frequency selective circuits by introducing reactive circuit elements. These frequency selective circuits provide an initial capability in interpretation of the sensory information. However, frequency selectivity is only the simplest of the many techniques available in a conexus. The circuit elements discussed below can be assembled into an endless variety of overall circuits. Many of these combinations will be discussed in connection with specific neural signaling functions and paths in the second half of this work.

2.3.2.1 Small signal versus large signal operation

Because of the fundamental nonlinearity of the Activa, most of its parameters are exponential in character. However, if the signal amplitudes are sufficiently small, the parameters of the Activa, and the conexus it supports, can be considered linear within some tolerance. This tolerance level separates what are called the small signal and large signal modes of operation. The large signal mode of operation can result in significant nonlinearities and even major waveform distortions. Large signals frequently lead to oscillations within the conexus. These conditions will be explored in this Section. **Chapter 8** will show most signals within the neural system (following the initial amplification provided by the sensory neurons) are large signals under a broad range of conditions.

Small signal conditions can be useful in the laboratory for evaluating the performance of the neural system. It is important for investigators to recognize and document the signal conditions they are exploring. Conversely, large signals introduced artificially can result in unexpected, and frequently pathological circuit operation.

2.3.2.2 General operating characteristics of a simple neuron

Figure 2.3.2-2 is an expansion of an earlier figure. It focuses on the nonlinearities of a typical Activa and the fact that many impedances associated with the collector circuit of the device are themselves nonlinear. The gray areas represent normal operating areas for the analog (electrotonic) Activa. The output signal is always directly traceable to the input signal in an analog Activa used in an analog conexus circuit. This is not true for an analog Activa used in a phasic conexus.

Frame **A** shows the input characteristic of the device from two different perspectives The two versions represent the same data. The left frame plots the input current as a function of the applied voltage. The right frame plots the observed voltage as a function of the applied input current. Both demonstrate that the input characteristic is that of a diode.

The operating range of the input circuit is shown by the shaded area and is limited primarily by the thermal breakdown of the diode at high currents. As a general rule, the useful operating region of the input circuit of an Activa is limited further by the box formed between 0,0 and the dashed line due to saturation in the collector circuit as discussed below.

Frame **B** illustrates the output characteristic developed earlier. It is the characteristic of an Activa <u>with no impedance in the circuit between the base and the ground point</u>. The output load is due to the combination of the electrostenolytic supply impedance and any impedance connected to the output signal terminal of the circuit. In this simple circuit, the capacitance of the axolemma is assumed to be negligible. In typical man-made electronic circuits, the load consists of a pure resistance; the corresponding load line is a straight line (shown dashed). However, in the biological case, the load is normally a forward biased diode representing the input circuit of the next neuron. The corresponding graphical representation is exponential (also shown dashed). The straight load line represents a real resistor of 1.5 megohms. The curved load line represents a diode input characteristic. It exhibits a dynamic impedance of only about 0.3 megohms at 30 pA current, but a much higher value at 10 pA.

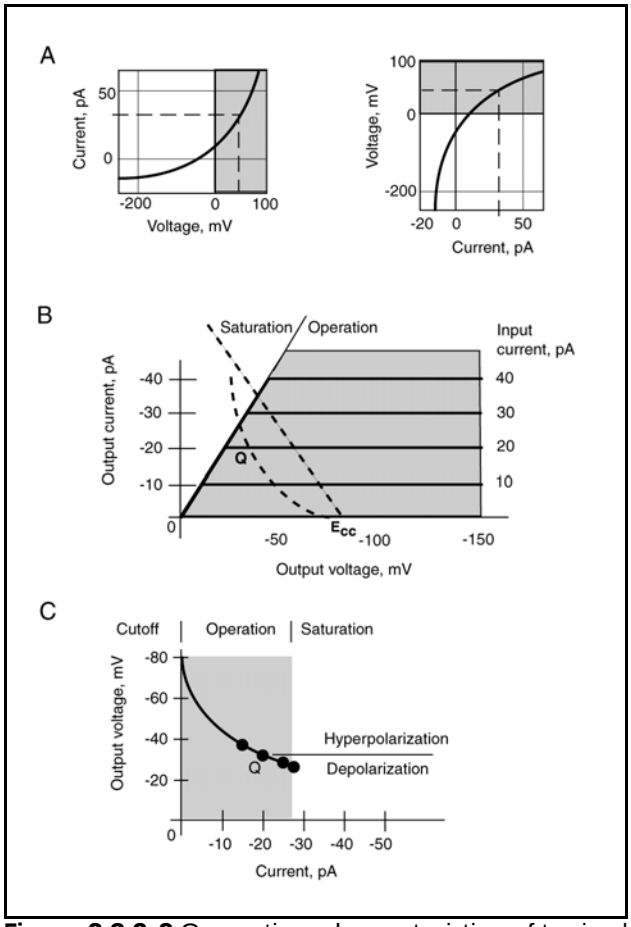

Figure 2.3.2-2 Operating characteristics of typical conexus in grounded base configuration. Operational regions, based on Ecc = –80 mV, are shaded. **A**, two presentations of the same input characteristic of the Activa. Dashed line represents saturation in the output circuit. **B**, the output characteristic of the Activa in electrical terms. **C**, the output characteristic of an Activa showing the output voltage relative to the INM and the nomenclature of biology. See text.

The intersection of the load line and the output characteristic (frequently called the operating characteristic), in the absence of an input signal, defines the quiescent point, Q.

For the –80 mV potential of the electrostenolytic supply and either load impedance shown, the Activa is driven into saturation for input currents exceeding about 30 pA. For these supply and load characteristics, the Activa cannot support collector currents exceeding 30 pA.

The transfer characteristic showing the current out as a function of the current in is usually not plotted for a junction transistor since the relationship is very nearly 1:1 over its entire operating range. The same is true for an Activa, as shown in frame **B**.

The output current and the output voltage are both shown as negative quantities in frame **C**. This is the convention for active devices of the *pnp*-type.

Frame **C** also shows the output characteristic using the vernacular of the neuroscience community. From a quiescent operating point, Q, an increase in the negative value of the collector (axoplasm) potential is described as hyperpolarization. For a reduction in the negative value, the change is described as depolarizing.

For an applied input voltage of arbitrary wave shape, but less than 10 millivolts amplitude, the resulting input current will be a reasonable copy of that waveform (from frame A). As a result, the current generated in the output circuit will also be a reasonable copy of the input waveform. However, if the applied input voltage signal is considerably larger than 10 millivolts, significant distortion can be expected in the output current waveform.

Since the current out is equal to the current in to the Activa, frame **C** can also be used to describe the output voltage as a function of the current into the Activa (with due attention to the sign conventions used and the limits of the operating range).

> It is very important to note that the axoplasm is always biased to a negative value with respect to the INM when the circuit is functional. This means that the potential of the axoplasm causes negligible leakage of current into the INM through any reverse-biased type 2 axolemma wall.
>
> If the connection to the subsequent neuron is removed in a laboratory experiment, the load impedance of the circuit is profoundly affected. This modified e circuit tends to operate in the mode of a pulse integration circuit due to the combined capacitance associated with the axon and the capacitance of the test probe. This situation significantly affects the recorded waveforms.

It is important to analyze these graphs more fully and determine the relationships between the quiescent operating point of the neuron and its operating points in the presence of an input signal. If the input conditions are adjusted to cause a current of 20 pA, the output circuit will now operate with an output current of –20 pA and an output voltage of –33 mV. These three values are spoken of as the quiescent values of the circuit. If the input conditions are such that the total input voltage generates no current in the input circuit, the output circuit current will also be essentially zero and the output voltage will be approximately, –80 mV which is assumed to be the net voltage applied to the collector of the Activa by the electrostenolytic supply. This is spoken of as the cutoff condition, no current flows in the Activa.

If an additional input current of 5 pA is added to the initial 20 pA, the output will move to the point of –25 pA and –30 mV. Similarly if the input current is reduced by 5 pA relative to the quiescent condition, the output circuit will be at –15 pA and –37 mV. Notice that if the input current is increased by more than 7 pA, the saturation limit of the Activa will be reached. The output will remain at -26 mV regardless of further increases in input current.

The language of the engineering and biological communities can be reconciled with reference to the quiescent point, Q.. Depolarization is a movement along the curve of frame **C** toward saturation. Hyperpolarization is a movement along the curve toward cutoff. In the case of this fundamental neuron, an increase in input current from its quiescent value will result in depolarization in the output circuit until saturation is reached. Reducing the input current will hyperpolarize the output until cutoff is reached at zero output current and maximum output voltage.

2.3.2.2 Dynamic operation of a conexus with transistor-action and a resistive poda impedance

A large variety of functionally different neural circuits can be formed with only a resistive

impedance between the base terminal of the Activa and the local ground potential. These will be discussed in this section. Cases where the poda impedance is complex will be discussed in **Section 2.3.4.2**. The special case where no electrical connection is made to the base terminal of the Activa will be discussed in the visual sensor section of **Chapter 8**.

2.3.2.2.1 Simple amplification

Assume initially that there is no input signal to the circuit shown above, that the poda impedance is equal to zero, and that V_{as} is more negative than V_{ps}. Let the dendritic supply be such that V_{ds} is marginally less positive than V_{ps}. Under this condition, no current will flow in either the emitter or the collector of the Activa. The quiescent potential, Q, of the axoplasm will approximate the electrostenolytic supply potential. If a small positive signal should be applied to the input terminal, a current will flow from the emitter to the base of the Activa. This will cause a similar current to flow from the base to the collector and through the axon impedance and the source impedance, Z_{as}. This current will cause an incremental change in the voltage across Z_{as} in response to the incremental rise in the input signal. The axoplasm potential will decrease (depolarize) from Q. The ratio of the incremental change in output voltage to the incremental rise in input voltage equals the voltage gain of the circuit. This is one description of the transfer characteristic of a (electrolytically speaking) monopolar amplifier.

Now, let V_{ds} be significantly more positive than V_{ps}. Under this condition, current will pass through the emitter-to-base circuit and significant current will flow in the collector circuit continuously. The collector potential will be at a quiescent potential, Q, that is less negative than the intrinsic electrostenolytic potential of the axon source, V_{as}. Under this condition, the circuit can respond to either a positive going or a negative going input voltage signal. The result will be a similarly positive or negative going voltage signal at the pedicel of the neuron. The ratio of the output signal amplitude to the input signal amplitude is a simple description of the transfer characteristic of a (electrolytically speaking) bipolar amplifier.

The current gain in a common-base connected Activa is limited to marginally less than 1.0 (as in a transistor in this configuration). However, it can exhibit significant voltage gain (and a significant power gain) because of the high collector impedance of the Activa. A typical voltage gain is 131 in the absence of any external load attached to the collector (axon).

If multiple neurons (employing common-base connected Activa) are connected in series, it is difficult to achieve significant voltage gain unless each subsequent Activa is a smaller device. This is because the low emitter input impedance of the Activa significantly loads the collector (axoplasm) circuit of the prior neuron. Thus larger size Activa (and neurons) are required to effectively stimulate one or more orthodromic neurons of nominal size.

The trade-off between Activa size and input impedance is an important one in neural circuits.

2.3.2.2.2 Thresholding circuit

If V_{ds} is more negative than V_{ps}, no current will flow in the emitter circuit and no current will flow in the collector circuit. The collector potential will be at the intrinsic electrostenolytic supply potential, V_{as}. To cause current to flow in the collector circuit, a positive input signal will be required that is sufficient to make the emitter-to-base voltage, V_{eb} positive. For higher signal inputs, an output signal proportional to the input signal minus the difference, $V_{ds} - V_{ps}$, will appear at the pedicel of the neuron. Such a thresholding circuit can be used to eliminate extraneous low level noise from the signal path (Ex., to avoid tinnitus in hearing). In theory, it can also be used to generate a "dead zone" in neural operation, a condition where nothing happens until a specific signal level is exceeded. While occasionally referred to in the literature, and potentially of major value, no documented dead zones have been uncovered among *in-vivo* analog circuits within the neural system in the course of developing this work.

2.3.2.2.3 Basic arithmetic functions

One of the major challenges of the neural system is to perform mathematical manipulations in the analog domain without resorting to transcendental functions (sines, cosines and other higher

mathematical functions). This is particularly important with respect to the complex multi-dimensional information associated with the visual system, and to stage 5 cognition.. To avoid using these functions, the neural system uses a variety of simple alternatives involving differentials instead of derivatives, time delays when processing serial information, addition of the logarithms of arguments in place of multiplication of the same arguments, computational anatomy and lookup tables. These techniques will be defined as they arise in later chapters.

Addition and multiplication are both performed using simple diode-based ladder networks of passive components as shown in **Figure 2.3.2-3(A)**. In the context discussed earlier, these diodes are analog circuit elements and not unidirectional switches (rectifiers). The left part of the frame illustrates the concept. The concept relies upon Kirchoff's Law for summing the currents at a node. Basically, the currents passing through the diodes on the left must equal the current passing through the diode on the right, without regard to the individual voltages associated with the different circuit elements. Clearly, if the currents on the left are proportional to the amplitudes of sensory information, the resulting current will be proportional to the sum of all of those sensory inputs. This is the condition found in a typical bipolar (summing) neuron of the retina.

Alternately, if the currents on the left are proportional to the logarithms of the amplitudes of the sensory information, the resulting current will be proportional to the sum of these logarithms. This is a powerful technique, since the sum of the logarithms of a group of arguments is equal to the logarithm of the product of their arguments.

Whether the circuit performs addition or multiplication is determined by two factors. First the relationship of the applied currents to the original information. Is the relationship linear, logarithmic or otherwise? Second, the portions of the operating characteristics of the diodes, in fact Activas, used in the circuit. The right part of frame **A** shows how the summing network is actually implemented using synapses wired as diodes to the left of the node (which is the dendroplasm of the neuron). A simple one-input conexus is shown to the right of the node.

Subtraction is accomplished using a different technique, it uses the three-terminal Activa in a two-input circuit as shown in frame **B**. By adjusting the value of the serial impedance, Z_{PSR}, and the shunt impedance, Z_{PSH}, of the poda circuit, the output gain associated with the dendritic and poditic input circuits can be matched. Since a signal applied to the poditic input results in an inverted signal at the axon, the circuit performs a mathematical subtraction. If the input currents are proportional to the amplitudes of the sensory information, the resulting current at the collector terminal is the difference between the amplitudes of the two streams of sensory information.

In analogy to multiplication, if the input currents are proportional to the logarithm of the amplitudes associated with the sensory information, the output is proportional to the difference in these logarithms. The difference in the logarithms of two arguments is equal to the ratio of the two arguments. Thus, this circuit can perform division without relying upon any complex arithmatic or algebraic procedures.

Coefficients can be introduced into the summing and differencing operations by varying the serial impedances on the left of each figure as desired. This will vary the current in that series channel relative to a fixed applied voltage. The result will then be an output signal proportional to the weighted sum or difference of the individual signals.

By combining the circuits of frames **A** and **B**, the product or quotient, or the sums or differences of any group of sensory signals can be computed without resorting to any transcendental algebra. The impedances, Z_{DSR} & Z_{PSR} in frame **B** can simply be replaced by the ladder networks on the left o f the node in frame **A**.

The number of terms that can be summed using a linear ladder network is usually limited by cross talk, the interaction of the input paths due to their electrical symmetry. The key to the successful operation of these networks is to make the impedances on the right of the node lower than the impedances associated with any channel on the left. As a result the common node appears to be a "virtual ground" relative to the inputs on the left. This problem is aided further by the use of diodes as impedances. Their unidirectional character limits the electrical interaction between the input channels. These isolation techniques make the extensive number of inputs associated

with the typical dendritic and poditic circuits shown in **Chapter 5** practical.

2.3.2.2.4 Threshold and pulse integration circuits

Frame **C** of the figure shows the threshold circuit discussed above with a graphical component. If a sine wave is applied to the non-inverting (dendrite) input while V_{ds} is equal or more negative than V_{ps}, the positive going part of the sine wave will be reproduced at the axon (collector) output but the negative going part will not be. By biasing the dendrite slightly with respect to the base terminal, the threshold level within the sine wave can be adjusted as desired.

Frame **D** of the figure shows a threshold circuit modified further. In this case, the impedance Z_C consists of a capacitance and resistive element in parallel, where the impedance of the capacitance is much lower than that of the resistive element. In this case, each part of the sine wave applied to the emitter (dendrite) terminal causes a pulse of current in the collector (axon) circuit, shown dotted. This current flows onto the capacitor and builds up a charge on the capacitor. The resultant charge leaks off slowly via the resistive element. As a result, the circuit acts as a pulse integrator as shown by the voltage waveform at V_C.

The capacitance of Z_C is usually formed by the unmyelinated surface of the axolemma. This type of circuit is used extensively in the signal transmission circuits of the neural system. It is associated with what are labeled stage 3 stellite neurons in this work. These neurons act as decoders of information encoded by an associated ganglion cells of the system. (see **Chapter 9**).

The muscle tissue of the organism, in conjunction with the stage 7 neuroaffectors, also operates like a pulse integrator circuit, which gives it a low pass frequency characteristic as discussed in **Chapter 16**.

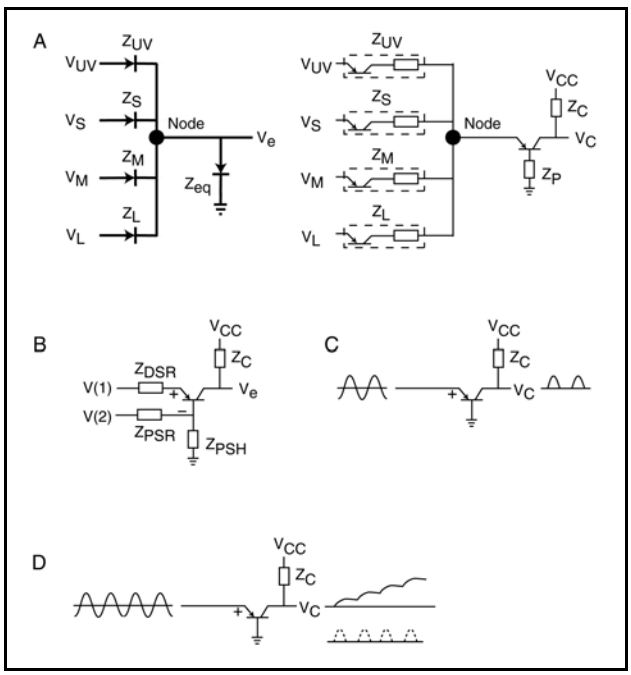

Figure 2.3.2-3 Addition and multiplication in ladder networks. A, left; generic summing network using diodes. A, right; biological summing network using active diodes summing to an Activa. B; generic differencing circuit. C; generic thresholding circuit. D; generic integrating amplifier (shown thresholding and then integrating the segments above threshold using a long time constant impedance Z_C. See text.

2.3.2.3 Individual temporal frequency selective neural circuits

This paragraph will introduce frequency selectivity within individual neurons based on the presence of lumped capacitances (capacitance that can be associated with a specific location in a circuit topology). Other techniques are used within the sensory modalities to create frequency selective responses and frequency selective filtering prior to further interpretation and perception. These techniques will be introduced as they occur in the system architecture.

2.3.2.3.1 The common low pass characteristic of neurons

Except for frame **D** above, the circuits described in the previous paragraphs contain no reactive elements. They will perform their function faithfully without regard to the frequency components associated with the input waveform. However, if one or more of the input impedances shown in **A**, **B** or **C** contain reactive components, the overall performance of the circuit may be changed significantly. The most common situation relates to the large shunt capacitances (capacitances between the

individual plasmas and the INM) associated with the lemma of the individual conduits. These capacitances are frequently large relative to the series impedance of the conduit. As a result, a low-pass electrical circuit is formed that will significantly reduce the amplitude of frequency components higher than its characteristic upper frequency. For many neurons, this frequency is less than 200 Hertz. The highest frequency passed by a neural circuit (even within the auditory modality) is believed to be less than 1000 Hertz. This maximum high frequency capability has been associated with neurons within the thalamus.

2.3.2.3.2 The capabilities of a lead-lag network

A situation is easily implemented wherein, the circuit associated with the dendrite, the podite or the axon consists of four electrical elements in a simple arrangement. Consider two changes to any of these branches of the above figure. Replace the series impedance with a pair of elements in parallel (one resistive and one reactive). Replace the shunt impedance, with a similar pair of elements in parallel. The resulting four element network is called a lead-lag network because of the characteristics of the signals at its output relative to the input. Relative to a nominal delay associated with signals traveling through such a network, certain frequency components of the input signal will appear earlier (leading) or later (lagging) than nominal. By adjusting the values of these components, it is possible to shape the overall frequency transfer characteristic of the overall circuit over wide limits. This results in emphasizing or de-emphasizing certain portions of the frequency spectrum passed within the overall limit set by the low pass characteristic described above. This type of frequency band manipulation is frequently observed with respect to ganglion cells (introduced in **Section 2.6** and discussed in **Chapter 9**.

2.3.2.3.3 Interference, an alternate frequency selective technique

The lead-lag network offers limited frequency selectivity (the narrowness of the selected frequency range relative to the middle of the range is limited. A more selective (albeit more complicated) network can be obtained by relying upon a different characteristic of networks. As suggested above, every network exhibits a finite time delay for a signal to be transferred from its input to its output. This time delay can be expressed in terms of a phase shift for each of the frequency components of the signal. The phase shift can be defined by the time delay associated with that frequency multiplied by the velocity of that frequency component as it travels through the network (expressed in angular measure). If two networks of different electrical length are excited by the same signal, and the output of these networks are then summed, certain frequency components will either be accentuated or suppressed based on their relative phase shift at the point of summation. This technique appears to be common in the stage 4 signal manipulation circuits designed to selectively filter certain sounds in the aural system and certain parallel line structures in the visual system of animals (more effectively in some species and individuals within a species than in others).

2.3.3 Dynamic operation of a conexus with *Transistor Action* and feedback

Figure 2.3.3-1(A) introduces the effect of the feedback impedance in the poda circuit connected to the base of the Activa. Designing common-base amplifiers requires care because of the inherent positive internal feedback. If the poda impedance is too large, instability is intrinsic. However, this feature can be used to advantage. The poda impedance between the base and the common ground terminal (n) may be the purely resistive component of the diode associated with a power supply or it may be augmented by other resistive or capacitive elements.

Recall that any current passing through the collector-base circuit path induces a voltage into the emitter to ground circuit. This inducement of a change in the input circuit due to a change in the output circuit is a fundamental definition of electrical feedback. <u>This circuit configuration forms the heart of all hybrid and projection neurons associated with the generation and regeneration of action potentials.</u>

2.3.3.1 The nature of feedback

A clear distinction is required between the concept of inhibition of psychology and the concept of feedback in signaling. The building blocks used in the neural system of animals are analog

electrical circuits. They can be modified to provide a variety of amplifier, comparator and pulse generating functions. However, they are inherently analog. If, as outlined above, a sample of a change in the output of a circuit is introduced into the input of that same circuit, the effect is known as feedback. The method of introducing this sample need not involve a separate and distinct (external) signal path. It may involve a shared impedance between the two circuits. The sample of the output returned to the input is normally not sufficient to block or inhibit the operation of the circuit. Its effect is determined by the amplitude and phase of the sample. The sample need not be "in" or "out" of phase with the output signal. The sample may have any phase relationship with the output signal.

> To appreciate this section completely, the reader must be familiar with the variety of techniques described in Maddock[53], or some other book on circuit analysis in electrical engineering. Techniques will be found in these books to predict the sensitivity of a conexus to oscillation when it is desired, and the safety margin before undesired oscillation begins when it is not..

If the poda impedance has a complex value defined by the resistive and capacitive components of the impedance, its phase angle will be intermediate between the above values.

Because of the importance of the phase angle of the sample returned to the input circuit, it is not appropriate to speak of positive or negative feedback except in the general sense.

Frame **B** illustrates the effect on the collector voltage of an Activa as a function of the collector current for different values of the common impedance, Z_P. Assuming the potential due to the poda membrane does not disturb the basic biasing of the overall Activa so that the Activa remains in the transistor mode, the input current to voltage characteristic of the Activa becomes distorted due to the feedback process as the value of the poda impedance increases as indicated. Since the output circuit shares the same poda impedance, the output current to voltage characteristic is similarly distorted. The degree of distortion is shown relative to a nominal poda impedance.

Note the effect of changing the value of the poda impedance; for low values of resistance only, the circuit operates as a common (well behaved) amplifier but with reduced gain. If the load impedance includes a shunt capacitance, it will operate with some distortion compared to a circuit with a resistor load but no instability. As the poda impedance rises, the amplification varies with signal level until the point is reached where the output current is bistable as a function of the input voltage.

> The distortion in these two characteristics is unusual and extremely important. The portion of the input characteristic sloping downward to the right represents an area of negative (dynamic) resistance. Such a negative dynamic resistance over even a limited region is indicative of instability and leads to two stable states (or an oscillatory condition if a reactive element is present such as a capacitor).

2.3.3.2 Internal feedback in the circuit of a fundamental neuron

The explanation of internal feedback as found in frame **B** needs expansion. The mathematics of this process involve complex algebra if the capacitances of the circuit are considered. Even for pure resistances, the mathematics are relatively difficult. This is because of the mode switching that is involved in the operation of the circuit. Mode switching typically occurs whenever a given current can be associated with two different voltages in the same circuit. Which voltage is assumed by the circuit frequently depends on secondary or parasitic circuit elements within the circuit. These are most often capacitances.

To alleviate this problem, a graphical analysis or computer program is usually used to determine the overall characteristic. However, the typical result can be shown here.

---

[53]Maddock, R. (1982) Poles and Zeroes in electrical and control engineering. NY: Holt, Rinehart & Winston

Frame **C** presents a four segment nomograph. It illustrates the input characteristic of the Activa at lower left, a fold line at upper left directing the process into the output characteristic at upper right, and finally, a temporal response transferred from the output characteristic. The lower left is more detailed than in Frame B so the actual operation of the circuit can be tracked. A load line has also been introduced, and labeled $V_{en}(I_s)$. The symbol n is used here as a synonym for the common electrical ground point of the circuit. The fold line at upper left is used to connect the common current axis of the two sets of axes. The upper right-hand segment represents the collector current versus the collector voltage for the Activa where the two currents are identical in the absence of any capacitance in the circuit.

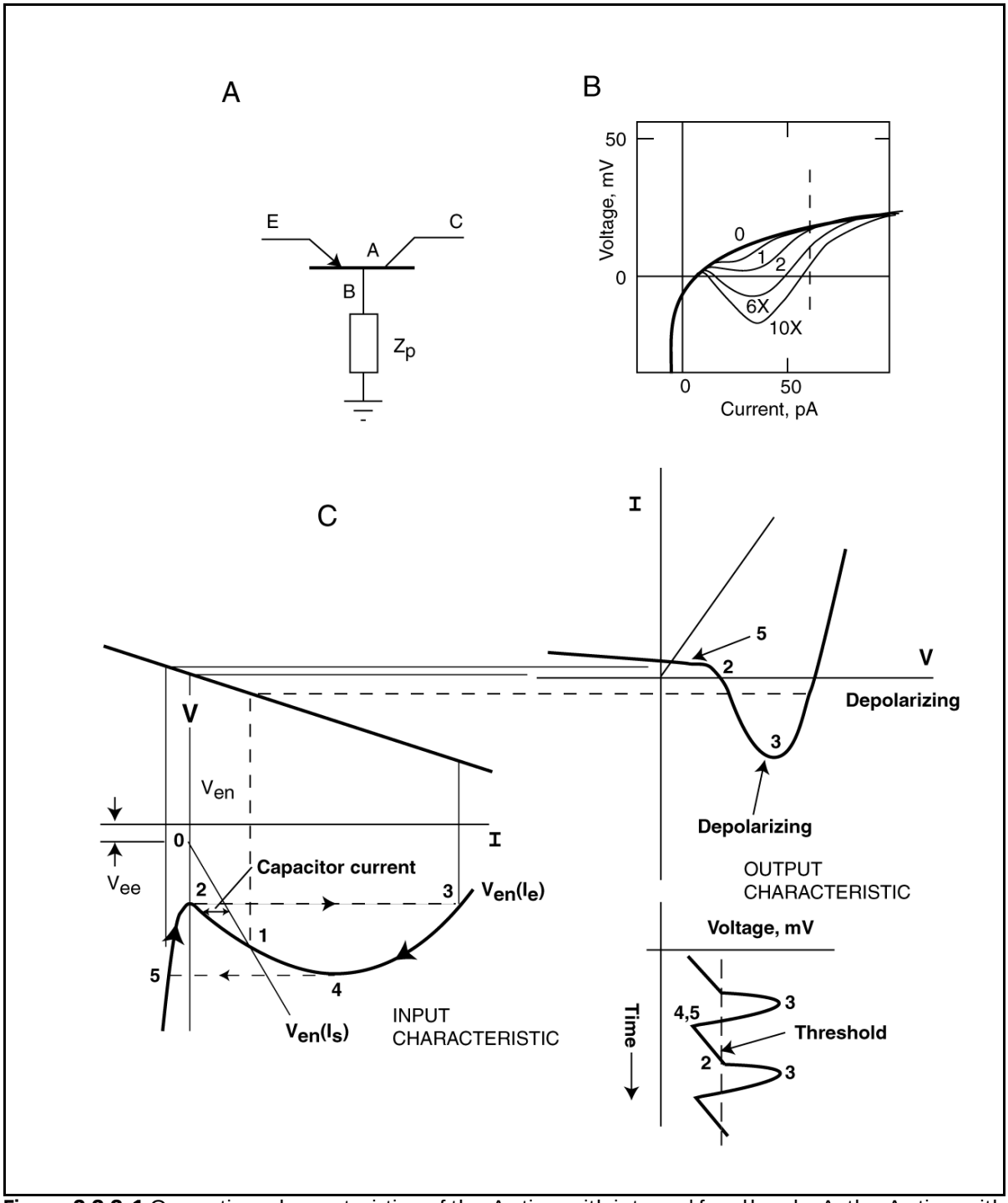

Figure 2.3.3-1 Operating characteristics of the Activa with internal feedback. A; the Activa with a significant poda impedance. B; the effective input characteristic based on the value of this impedance. C; the overall operating characteristic of the conexus based on this impedance. See text.

The operation of this circuit is best understood by following the numbers next to the curves. Begin

at point 1. At this point, the operating curve labeled $V_{en}(I_e)$ intersects the static load line, $V_{en}(I_s)$. However, at this point the operating curve has a negative slope. It represents a negative impedance. This causes the circuit to be unstable. As a result, the operating point will proceed to point 2. At this point, the voltage $V_{en}(I_e)$ is compatible with two different emitter currents. The circuit will jump to point 3 and then proceed in an orderly way to point 4. At point 4, the operating curve can support two different emitter currents. The operating point will jump to point 5. At point 5, the operating point will proceed toward point 2. When it reaches point 2, the cycle will begin again. Note however, the waveform never returns to the initial point, 1.

The lower right segment demonstrates the circuit generates an action potential. The value of the capacitance and the internal impedance of the Activa at different times during the operating cycle determines the pulse rate of the output action potential very precisely. Note the voltage can not be maintained at point 3 without changing circuit element parameters. The circuit is not bistable. It is oscillatory. It can be made monostable at a low axoplasm potential by adjusting the impedance of the load line shown or by changing the dendrite source potential, V_{ee}, so that the intersection defined by point 1 is along the line between points 2 and 5. It can also be made monostable at a high axoplasm potential if the load line crosses the circuit impedance between points 3 and 4..

The circuit just described is the fundamental relaxation oscillator of the neural system. Its utility within the neural system will be discussed further in **Section 2.6** and in detail in **Chapter 9**

2.3.3.3 Evidence supporting the relaxation oscillator description

Burke, et. al. have described the clinical characteristics described in the above figure in section 6 of their paper[54]. It is interesting how closely their description of the refractory portion of the operating cycle agrees with the intervals associated with the paths between points defined above.

Baker & Wood have presented a measured response similar to the output characteristic of frame C[55]. However, they did not discuss it or even cite it in the same paper.

Nonner has provided a static characteristic (with data points) for a membrane of an axolemma near a Node of Ranvier[56]. The characteristic is virtually identical to the output characteristic of frame C, labeling the current in mA/cm^2, the "sodium current" through the axolemma as opposed to the net current into the axoplasm. The negative resistance region is clearly identifiable, with peak current density at a nominal 55 mV.

Avenet & Lindeman have provided a measured response from a gustatory sensory neuron of a frog (*R. ridibunda*) that is remarkably similar to the theoretical output characteristic of frame C above[57]. **Figure 2.3.3-2** shows their "whole cell patch clamp" recording which is actually from just the axoplasm of the cell. They provided little description of their exact test configuration or protocol. However, the curve marked "peak in" shows a region of negative resistance on the order of –60 megohms between a voltage of –30 mV and zero mV from their holding potential of –80 mV. This would correspond to the active region (the region exhibiting amplification) of the Activa within the neuron.

---

[54]Burke, D. Kiernan, M. & Bostock, H. (2001) Excitability of human axons *Clin Neurophysiol* vol. 112, pp 1575-1585

[55]Baker, M. & Wood, J. (2001) Involvement of Na^+ channels in pain pathways *Trends Pharma Sci* vol. 22, no. 1, pp 27-31

[56]Nonner, W. (1969) A new voltage clamp method for Ranvier nodes Pfluger Arch vol 309, pp 176-192

[57]Avenet, P. & Lindemann, B. (1987) Patch-Clamp Study of Isolated Taste Receptor Cells of the Frog *J Membrane Biol* vol 97, pp 223-240

Comparing figures 3A & 3B and 5A & 5B of their paper is instructive because they show the cell operates nominally whether any sodium ions are present in the external bath or not. They demonstrate *again* that it is ***not*** sodium ions that are flowing into the axoplasm from the bath that constitutes the inward flowing current (the so-called "sodium current" labeled by Hodgkin & Huxley).

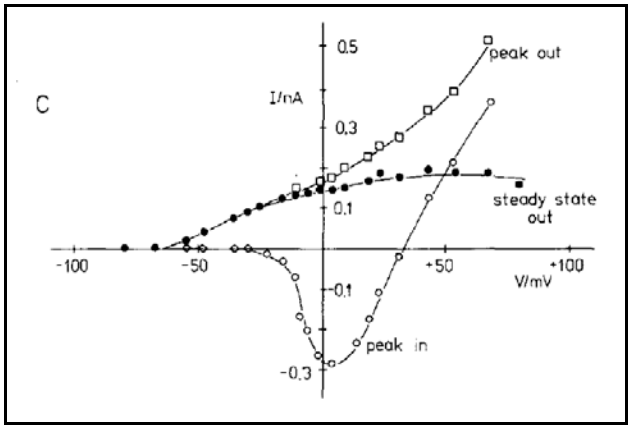

Figure 2.3.3-2 Axoplasm patch-clamp potential measured using parametric stimulation Bath: NaCl-Ringer's with 3.5 mM K. Pipette: standard filling solution with 110 mM KCl, no ATP. Pipette resistance not compensated.. Peak-inward, peak-outward and steady-state-outward currents as a function of command pulse voltage. See text. From Avenet & Lindemann, 1987

2.3.4 Emulation and simulation of Activa and Activa circuits

In this section, emulation will refer to the use of physical circuit elements to represent the electrical performance of another physical element or elements. Simulation, on the other hand will refer to the use of a mathematical construct (frequently via a digital computer) to represent the electrical performance of a physical element or circuit.

Care must be taken in both emulations and simulations to recognize the significant impact of temperature on the neuron. The sensitivity to temperature is much higher in electrolytic circuits and BLMs than in metallic circuits.

The Activas of the neural system vary in size and capacity according to their function. They are all made up of a large number of unit Activas arranged within a finite area (the synaptic disk in the case of a synapse). The characteristics of many Activa circuits are catalogued in **Chapter 9**.

2.3.4.1 Emulations

This section will differentiate between the emulation of an Activa alone, the simpler task, and the emulation of a complete Activa circuit (including its electrical circuit configuration, associated components, output load and input signal).

Selection of a man-made transistor to emulate a biological Activa requires close attention to detail. Similarly, simulation by digital computer, using a variant of SPICE or similar programs, also requires close attention to the selection of a template from the available library.

Emulation of the adaptation amplifier within the sensory neurons is more complex than for other Activa and neurons. The unique characteristics of the adaptation amplifier conexus developed in **Chapter 8** must be introduced into the emulation or simulation of this component.

2.3.4.1.1 Emulation of the first order Activa

Biological semiconductors operate in a current-voltage regime much different than current man-made devices. This will change in the near future as man-made devices leave the realm of silicon and germanium and move to substrates of binary chemical composition. However, at this time, the current-voltage characteristic of an Activa cannot be approximated by a man-made transistor without employing parameter scaling.

To emulate an Activa using silicon or germanium transistors, it is necessary to scale the currents and voltages properly to account for this difference in operating range. In general, this scaling requires that the voltages used reflect the ratio between the offset parameters of the two technologies.

The offset parameter of the biological Activa is known with considerable precision from the graph of Yau[58]. The offset parameter of transistors is less well known and was originally derived empirically from test data. Under those conditions, it became common to use the values of 0.2 volts for germanium and 0.6 volts for silicon. Looking more closely at these materials, the so-called photovoltaic potential is given as 0.1 volts for germanium and 0.5 volts for silicon. An alternate example for silicon is the parameter called the base cutoff parameter by Motorola[59]. The value of this parameter is very close to 0.31 volts at 298 Kelvin and a collector to emitter voltage of 30 volts. It appears that this last value best represents the theoretical offset parameter of silicon.

Using 0.31 Volts as the offset parameter of Silicon, an Activa operating with a collector potential of -150 mV would be emulated by a silicon pnp transistor with a collector potential of minus 4.5 volts. If a germanium transistor is used, a collector potential of about minus 3.1 volts would be appropriate.

If it is preferred to use a npn type of man-made transistor, the investigator must remember to reverse the polarity of all potentials applied to the circuit relative to those in the biological circuit (and note this fact carefully in any published report of the investigation).

Similarly, scaling of the current regime requires scaling the impedance level of the emulation circuit to reflect the ratio between the reverse current saturation parameters of the two technologies. The reverse saturation current of man-made devices vary significantly between silicon and germanium. Those of silicon are generally in the nanoampere range and those of germanium are in the microampere range. The reverse saturation current of most biological Activas appear to be in the range of picoamperes or lower. The data of Luttgau discussed above, indicates a reverse saturation current of 18-25 picoamperes for a biological diode of unspecified (but undoubtedly large) cross-sectional area.

In the case of the typical photoreceptor cell, the in-vivo output Activa is only capable of a forward collector current on the order of 25 picoamperes, the reverse saturation current under this condition is probably measured in tenths to hundredths of a picoampere.

The result of the scaling process requires the emulation circuit to operate at very high impedance levels. At these levels, the shunt capacitances of the emulation circuit become quite important. They may control the bandwidth of the resultant circuit. The investigator should evaluate the desirability of using germanium versus silicon in emulations because of this impact.

While it is formally correct to base the above scaling on the reverse saturation current of the Activa and the selected man-made component, the low values for the reverse saturation current associated with silicon are frequently not documented in conventional transistor data sheets because they are trivial in many applications. Similarly, biological researchers seldom record the reverse saturation currents associated with the conduits of a neuron. This complicates the scaling process. The alternative is to employ a totally empirical method of scaling. In this method, the collector voltage is chosen first to properly emulate the biological collector potential based on the ratio of offset parameters as described above. The emitter current is then scaled by overlaying the current-voltage characteristics of the Activa and the chosen emulation transistor to determine the current scaling factor. These scalings will determine the scaling factor applicable to the current on the collector current to collector voltage characteristic of the emulation device.

2.3.4.1.2 Emulation of the second order Activa circuit

After developing the proper emulation of the desired Activa at the first order level, it is possible to emulate the entire circuit for a given neuron. Most of the circuits within neurons employ Activa in the common base (or grounded base) configuration. However, the adaptation

---

[58]Yau, K. (1994) Op. Cit.

[59]Motorola (1974) Semiconductor Data Library, Series A, Volume 1. Figure 13 on pg 2-399

amplifier of the photoreceptor cell employs the common emitter (or grounded emitter) configuration and the lateral cells (horizontal and apparently most amercine cells) employ a hybrid circuit where input signals are applied to both the emitter and base signal leads.

After the configuration to be emulated is chosen, the appropriate load line can be drawn on the output characteristic of the circuit based on the scaling parameters developed above. This output characteristic is usually the collector current versus collector to ground voltage characteristic. This characteristic varies considerably depending on whether the common base or common emitter configuration is used.

While a resistive impedance may be used to approximate the load line over a limited range, it should be remembered that the load is generally a diode and the Activa circuit is operated under large signal conditions. The use of a resistive load may be deceiving under these conditions and mask non linearities that occur in the real circuit.

2.3.4.2 Simulations

Simulations via digital computer can be performed by implementing a set of differential equations or by calling upon a library of preprogramed transistor characteristics. The later approach generally involves more parameters and provides a more accurate result. However, the choice of a template from the library of available transistors should follow the procedure described in the previous section. In the selection of a preprogramed template, it is important to confirm that the offset parameter appropriate to the base material has been included in the template, and the program is capable of operating at the impedance levels required.

The computer simulation known as NEURON implements a large set of (unsolved) differential equations following the empirical concept of Hodgkin & Huxley. It numerical integration to describe the solution of this set. It does not provide a closed form general or particular solution to the set. It is primarily concerned with the phasic operation of a putative neuron and is archaic from the scientific persective. This simulation is much more complex and much less related to the underlying mechanisms than the closed form description of the neuron provided here. Before using the simulation program known as NEURON, the investigator should at least assure himself that the program properly reflects the effect of temperature on the operation of the neuron.

2.4 The synapse– Concept versus functional reality

The literature contains many conceptual discussions related to the synapse, generally without providing a falsifiable null hypothesis. The term synapse was introduced long ago to describe the generic connection between neurons and/or neurons and other biological tissue. In a modern context, these two categories are distinctly different. The transmission of signals between neurons is fundamentally an electrolytic process (involving only electrons), while the connection between neurons and other biological tissue is fundamentally a chemical process. Unfortunately, the majority of past empirical work has focused on the chemical synapse at the pedicle of stage 7 neurons (at a muscle interface and as the origination of glandular substances) while much of the early theoretical work used these empirical results to describe the more general synapse (at the neuron to neuron interface) that is electrolytic.

The literature is also conflicted with regards to the concept of a gap junction. Some texts insist they are fundamentally limited to electrical (electrolytic) junctions. Others show complex caricatures of the "chemical junctions" as gap junctions with endless varieties of neurotransmitters crossing the gap. In this work, all neuron to neuron and neuron to muscle connections involve distinct gap junctions. The former involve electron transfers to support signaling while the latter involve the release of a variety of chemicals tailored to specific tasks. With respect to the glandular system, it is the terminals of the stage 7 neurons that release chemicals known to be effective from a glandular perspective.

Section 1.2 provided an overview of many of the features involved in this determination. That section notes, there are two major functional roles for synapses;

• the transfer of information from an axon or axon segment to the next orthodromic axon segment or neurite of the

neural modality and of the electrolytic type or,
• the transfer of commands to activate a muscle or gland from a stage 6 neuron to a muscle or gland and of the chemical type.

This work makes it perfectly clear, ***the vast majority of all synapses are of the electrolytic type***;

•over 99% of all synapses are of the electrolytic type and do not release any chemicals within the synaptic junction related to signal transfer and,
• less than 1% of all synapses are of the chemical type releasing chemicals into the synaptic junction between a neuron and muscle tissue at the skeletal-muscular interface or into the blood stream as part of the glandular interface.

All known morphologically defined Nodes of Ranvier (found within stage 3, 6 and 7 signal projection neurons) involve the transfer of signals between axon segments without involving any chemicals directly in the transfer. They are all of the electrolytic type.

All of the electrolytic neurons transfer signals between two neural elements with temporal delays measured in microseconds, not milliseconds. The instrumentations used by biological investigators have not generally been capable of measuring these short time intervals. As a result, most of the reported measurements have include the time required for the transfer of signals through portions of axonal or neuritic tissue.

The following material will address and support these assertions in detail.

2.4.1 Historical aspects: the electrolytic vs chemical neurotransmitter

Shepherd discussed a variety of synapse features in 1998 but without a substantive framework to support the discussion[60]. This work will separate the electrolytic synapse from the chemical synapse on functional grounds.

The vast majority, probably exceeding 99% of neurons are involved in signal transfer *within* the neural modality and are of the electrolytic type. Less than 1% of neurons are involved in the release of chemical substances at the neural-muscular or neural-glandular interface and are therefore of the chemical type.

Section 1.1.5 and particularly **Figure 1.1.5-3** describes the myriad locations where synapses are found. Electrolytic synapses connect all neurons within stages 1 through the inputs to stage 7 neuorns. It is only at the outputs of the stage 7 neurons (primarily at the neuron-muscle and neuron-glandular interfaces that chemical synapses) are actually found.

Pannese provides a recent, but brief, background on the synapse. It is followed by a broader discussion heavily weighted toward the chemical concept of a synapse. Fonnum provides a more systematic discussion of the requirements on a synapse[61].

The concept of a chemical neurotransmitter began in 1904 with a hypothesis by a student. McGeer, et. al. review the early discussions based on analogy with the action of pharmaceutical preparations[62]. It remains largely based on this analogy to this day. However, rather than the injection of a pharmaceutical, the evidence now is largely based on topical application to tissue. The fact that the presumed neurotransmitters have such a potent impact on the metabolic activity of the neuron when applied to non-synaptic areas has caused a significant problem. McGeer, et. al. have divided chemical neurotransmitters into two classes to meet this challenge. They speak of the metabotropic function of neurotransmitters as well as the

---

[60]Shepherd, G. (1988) Neurobiology. NY: Oxford University Press

[61]Fonnum, F. (1984) Glutamate: a neurotransmitter in mammalian brain J. Neurochem. vol. 42, pp 1-11

[62]McGeer, P. Eccles, J. & McGeer, E. (1987) Molecular Neurobiology of the Mammalian Brain. NY: Plenum Press. pg 80-174

conventional ionotropic function. This work will associate their metabotropic function with the hormonal system and their "ionotropic" function with the actual transmission of signals between neurons, by electrons and holes. It will show that most materials labeled neurotransmitters, or inhibitors, in the literature relate exclusively to the metabotropic function. McGeer, et. al. conclude their introductory material with the statement, "It has turned out that chemical transmission is a much more complicated biological process than Dale (circa 1938) had supposed."

Lambert & Kinsley (2011)have provided the most recent tabulation of the putative neurochemical categories and neurotransmitters. The labels are largely conceptual. They can be read to largely support the more specific categorizations defined in this work (although the tabulations do not include the word electron anywhere). Most of the materials in their table 5.3 are identified as neuromodulators rather than neurotransmitters.

Ottoson, a very much more hands-on and experienced researcher addressed the question in 1983[63].

> The introduction of the technique for intracellular recording and the discovery of excitatory postsynaptic potentials led to the abandonment of the earlier generally accepted idea that synaptic transmission occurred by direct electrical contacts between neurons. It therefore came as a surprise when it was found that transmission in some invertebrate synapses does in fact occur by current spread. The recorded delay in conduction was negligible so that the postsynaptic potential was concurrent with the rising phase of the impulse in the presynaptic neerve fibre; thsi finding precluded a chemical link in the transmission. These observations demonstrated that there war specialized synapses for electrical coupling between neurons. An extensive search soon disclosed regions where the membrane of neighboring neurons appeared to be fused. These so-called *gap junctions* apparently provided for low resistance electrical contacts between cells. . .These junctions allow electrical activity to be transmitted form one cell to another without the mediation of neurotransmitters." He goes on in the following paragraph, "It is interesting to see how the notion of synaptic transmission in the nervous system has changed in the past few decades. From a position of universal acceptance for almost a century, the electrical hypothesis was ousted in the early 1950s and the chemical hypothesis was greeted with great acclaim. Today, abundant evidence for both modes of transmission exists."

This work will separate the electrolytic junction, used universally within the neural system from the chemical synapse used as the neuroaffector controlling the hormonal system and most of the neural/motor interface.

In the following paragraph, McGeer, et. al. are clearly referring to neuron-to-myocyte synapse. They say, "These chemically transmitting synapses were designed to compensate for electrical mismatch between the presynaptic and post synaptic components of the synapse, e. g., the very small nerve terminal and the large area of the muscle fiber membrane with its high capacity." **Section 2.7.1** will show that more than compensation is involved. An alternate operating protocol is involved.

Pannese has confirmed, the subject of electrolytic versus chemical neurotransmitters was a hot topic during the 1930-40s. It was supposedly settled in favor of the chemical neurotransmitter, using the technical base available at that time. More recently, the debate has gained new life with the demonstration of electrical synapses in a long list of animals (pp 108-116). While he continues to suggest the primacy of chemical neurotransmitters, he recognizes the legitimacy of electrolytic synapses in specialized situations and the presence of both types of synapses in many animals.

Following the debate in the 1930-40s, it became necessary to isolate one or more putative neurotransmitters. Fonnum noted; "Electrophysiological studies focused early on the powerful

---

[63]Ottoson, D. (1983) Physiology of the nervous system. NY: Oxford University Press page 191

and excitatory action of glutamate on spinal cord neurons. Since the action was widespread and effected by both the D- and L-forms, it was at first difficult to believe that glutamate could be a neurotransmitter." Fonnum provides a variety of evidence concerning glutamate as a neurotransmitter. It is largely conceptual and involves topical application of the material, generally in bulk, and not to a specific neuron or portion of a neuron.

McGeer, et. al. assert "Highly convincing evidence that L-glutamate and L-aspartate should be neurotransmitters comes from their iontophoretic actions. Both of these dicarboxylic amino acids powerfully excite virtually all neurons with which they come in contact. (Page 186)" Such topical application of a chemical does not relate to its role as a neurotransmitter. It relates to its role as a fuel source, particularly when its concentration exceeds the normal 2-5% at the site of electrostenolysis. Just prior to the above quote, McGeer, et. al. say "While the anatomical data at this stage must still be regarded as highly tentative, it can be said that glutamate and aspartate meet many of the generally accepted anatomical criteria for neurotransmitter status." The words "should be" and "highly tentative" are important in the above quotations. Chapter 3 will develop the role of glutamate and aspartate as the primary fuels, neuro-facilitators, of the neural system.

Still earlier, McGeer, et. al. said "Nevertheless, it must be recognized that truly definitive markers that can be applied at the cellular level do not exist for glutamate and asparate as they do for several other neurotransmitters. Therefore, evidence for neuronal identification and for pathways involving these amino acids must in all cases be considered as tentative." Their chapter 6 describes the role of glutamate and aspartate primarily in metabotropic terms which are completely consistent with the above sections of this work. Their table of metaboloid concentrations by location within the nervous system is very useful. They also note the ubiquitous ability of glutamate and aspartate to excite multiple neural "receptors" in response to topical application. The problem of markers has been overcome through nuclear chemistry and other techniques as discussed in **Sections 3.2.2**.

> Additional experimental effort needs to be expended on identifying the microscopic portions of a single cell that are sensitive to the topical application of so-called neurotransmitters. It is predicted that these areas will be found to be chemically asymmetrical membranes segments **and** the applied chemical will form a stereochemical union with the membrane at these locations.

Lam threw down a gauntlet in 1978[64]. At the conclusion of a comprehensive program studying the photoreceptor, he asserted, "In conclusion, our chemical studies so far indicate that none of the known putative transmitters appears to be a likely candidate for the photoreceptor transmitter." and
"The possibility that an as yet unsuspected or unknown substance may be the transmitter for vertebrate photoreceptors has to be seriously considered."

Brown noted in 1991, "The classical view of chemical transmission was that an individual nerve cell only released a single transmitter substance and that the effects of that substance depended on the particular receptor on the post synaptic cell."

Greenfield discussed current problems with the concept of a chemical neurotransmitter in 1998[65]. Her frustration is couched in such expressions as "I shall consider some of the principal anomalies arising from current findings, specifically why; (a) there are many diverse transmitter substances; (b) transmitters are released from sites outside of the classical synapse; (c) some well-known transmitters have surprising 'modulatory' actions; (d) synaptic mechanisms themselves have no obvious or direct one-to-one relationship with functions such as movement, mood and memory; and (e) it is difficult to extrapolate from drug-induced modification of synaptic mechanisms to the effects of those same drugs. . ." and "No doubt the forthcoming years will herald the discovery of still further surprising transmitter-like molecules that strain the accepted

---

[64]Lam, D. (1978) Identified cells in the vertebrate retina *In* Osborne, N. *ed*. Biochemistry of Characterised Neurons. NY: Pergamon Press pp 250

[65]Greenfield, S. (1998) Future Developments. *In* Higgins, S. ed. *Essays in Biochem*. vol. 33, chap. 14, pp 179

concept of how transmitters behave." She concludes with "We are about to enter an exciting phase in brain research, where there is a shift in emphasis away from the all-pervasive paradigm of classical synaptic transmission." This work provides the basis for that shift and provides a rationale for each of the above problems. Unfortunately, the new paradigm is completely contrary to the concept of a chemical neurotransmitter.

Baars, writing in Baars & Gage, has made a major statement that is best introduced by an allegory;

> The academic neuroscience community has just placed its toe in the waters of real neuroscience when Baars noted (page 62, 2007), "It is now known that electrical synapses, which use no neurotransmitter al all, are much more common than was previously believed. Even the dendrites of a single nerve cell may be able to compute useful information. . . Other surprises keep coming."
>
> As a matter of fact, virtually all synapses (greater than 95%) are electrolytic (the precise form of electronic) synapses. Furthermore they are three-terminal electrolytic devices (like the Activa within the neuron) that are sometimes wired to emulate an active diode (a two-terminal device). And, the role of the "neurotransmitters" glutamic acid and GABA is to power the neuron or synapse. They act as neuro-facilatator and neuro-inhibitor respectively.
>
> Although Baars reverts nearly instantly to the common wisdom, his including the above statement shows the winds are changing.
>
> This paragraph was presented earlier in **Section 2.1.2**. of the general introduction to the neuron.

Deutch & Roberts[66], writing in Byrne & Roberts, have reviewed the rapidly changing character of the conventionally defined, and more recently unconventional, neurotransmitters to include various peptides, a few gases and potentially all electronic synapses. "Why have so many transmitters" is the provocative title of an introductory section of their work. They noted (page 287), "The designation of a substance as a neurotransmitter rests on the fulfillment of certain criteria, which were discussed in Chapter 9. However, these criteria were formulated early in the modern neuroscience era, and are based mainly on studies of peripheral sites, particularly the neuromuscular junction and superior cervical ganglion." They also note (page295), "The use of the terms conventional and unconventional transmitters reflects our current unease with the expanding definition of transmitters." Their focus on the neuromuscular junction is key, to satisfy the need for specificity, a variety of neurotransmitters are employed at the pedicles of stage 7 neurons.

Spray et al[67], also writing in Byrne & Roberts, have introduced the same sense of the change under way when they note, "Electrical synapses do some things that chemical synapses cannot." Unfortunately, they continue to interpret these electrical synapse within the putative chemical theory of the neuron that is not supported here.

Randall et al. have provided a cartoon of an electrical (more specifically an electrolytic) junction being interrogated electrophysiologically. **Figure 2.4.1-1** shows their cartoon. The cartoon suffers from two significant shortcomings. First, the lemma of neural cells is a perfect insulator except in the areas modified at the molecular level to support electrical interaction. Second, they failed to recognize that the milieu between their presynaptic and post synaptic neurons was in fact at electrically ground potential as shown by the alternate representation. This modification makes the junction an active electrical junction employing semiconductor

---

[66]Deutch, A. & Roberts, J. (2004) Nonclassical signaling in the brain *In* Byrne, J. & Roberts, J. *eds*. From Molecules to Networks, NY: Academic Press Chapter 10

[67]Spray, D. Scemes, E. Rozental, R. & Dermietzel, R. (2004) Cell-cell comunications: an overview emphasizing gap junctions *In* Byrne, J. & Roberts, J. *eds*. From Molecules to Networks, NY: Academic Press Chapter 15

physics to explain its operation. The cartoon also shows how an electrolytic synapse can be made reversible by simply changing the polarity of the applied potentials (a characteristic of devices employing semiconductor physics but difficult to explain using chemical principles). This capability has been well documented (**Section 2.4.2.2**).

Note also that the synapse is operating in the analog mode. Randall et al. showed its performance when excited by pseudo action potentials but their calibration is open to question if they did not recognize the condition of the fluid environment between their cell walls. While recognizing the much faster operation of the electrolytic synapse, the rest of their text suffers from not appreciating the actual active electrolytic character of their conceptual synapse (**Section 2.4.3**).

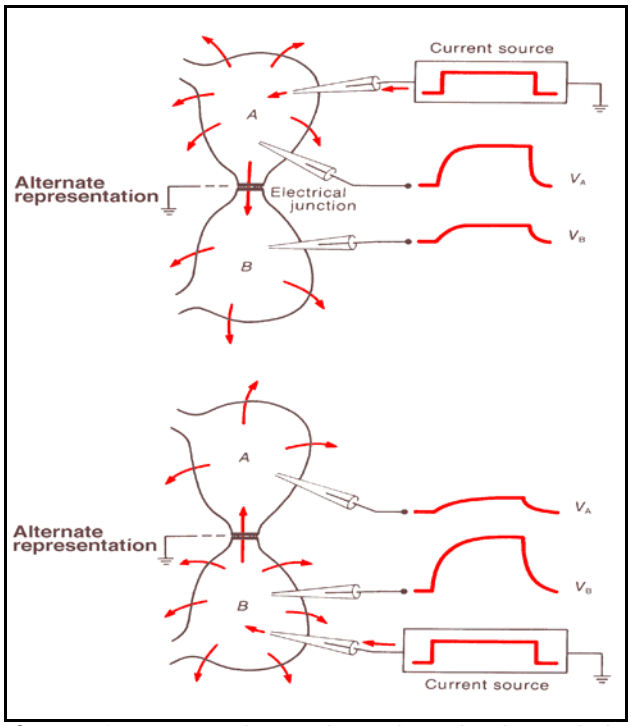

Figure 2.4.1-1 Early and updated electrolytic synapse. A cartoon from Randall et al. shown with the addition of an alternate representation. The curved arrows shown exiting the lemma of the neuron are superfluous. The lemma is a perfect insulator except in the junction areas. The alternate representation is a better cartoon of the actual in-vivo situation that was unknown to the investigators. It constitutes the third terminal of the electrolytic neuron. See text. Modified from Randall et al., 1997.

As will be shown below, the transmission of a signal across a synapse is extremely simple when the signal remains in electrical form. In this case, the physical structure of the synapse forms an active electrolytic device, an Activa, virtually identical in characteristics to the man-made transistor. When the Activa is properly biased electrically, an electron can pass from the pre-synaptic to the post synaptic terminal of such a device with an efficiency of greater than 99%.

On the other hand, the chemical synapse requires what is generally described as the translation of the signal from an electrical form in an axoplasm to a chemical form in the synaptic gap and then a reconversion from the chemical form back to an electrical form in the post synaptic neuroplasm. How such a translation would be achieved remains largely conceptual to this day.

Ramachandran (page 602) provides material concerning a large number of chemicals believed to be released at the pedicles of stage 7 neurons. The open question is how many of these (if any) are neurotransmitters and how many are neuroaffectors?

Chapter 3 will review the chemical characteristics of various pharmaceuticals (including their stereo-chemistry) and how these characteristics determine whether the materials are neuro-facilitators or neuro-inhibitors.

2.4.1.1 Requirement on a chemical neurotransmitter

The detailed description of a chemical neurotransmitter and its mode of operation (in equation form) have not yet appeared in the literature. However, a spirited debate raged during the 1980's.

Ottoson, in a chapter labeled "putative transmitters[68]," asserted, "Despite arduous efforts, only a few compounds have been identified which can with various degrees of certainty be considered as neurotransmitters. To be identified as a transmitter, a substance should fulfil certain criteria. The main properties to be establish are the presence of the substance in the presynaptic terminals and its release during presynaptic activity. Furthermore, there should be a correlation between its release and the amount of presynaptic activity; local administration of the compound should produce the same effect as presynaptic activity and substances antagonistic to the putative transmitter should block synaptic transmission. Actually, none of the compounds generally considered to be transmitters in the central nervous system fulfils all these criteria. Because of the complexity of the central nervous system, it is technically difficult to prove the release of a putative transmitter or to administer it locally at the synapse. The rigorous criteria which are applied to the peripheral system therefore cannot be easily satisfied within the central nervous system."

Fonnum describes "the four main criteria for the classification of a chemical as a neurotransmitter:

1. it is presynapticaly localized in specific neurones;
2. it is specifically released by physiological stimuli in concentrations high enough to elicit postsynaptic response;
3. it demonstrates identity of action with the naturally occurring transmitter, including response to antagonists; and
4. mechanisms exist that will terminate transmitter action rapidly."

He then attempts to show that glutamate meets most of these requirements. He does raise one concern; "There is a poor correlation between the pharmacological activity of the agonist and antagonist and the binding to glutamate sites in several studies."

Each of Fonnum's criteria are global in concept. They lack specificity with respect to the mechanisms involved in meeting these criteria. Item 3 appears to be the catchall item. It includes the requirement that the chemical neurotransmitter somehow cause the generation of a change in electrical potential within the post-synaptic neuroplasm. The mechanism used to accomplished this transition has not been described in detail in the literature.

McIlwain & Bachelard gave a similar list of five criteria[69];

1. the transmitter must be stored specifically pre-synaptically and enzymes for its synthesis should be found there.
2. pre-synaptic stimulation (usually but not necessarily electrical) should result in release of the transmitter.
3. controlled application of the transmitter should elicit the same post-synaptic response observed on pre-synaptic stimulation.
4. specific agents should be found which block the post-synaptic response to the transmitter
5. specific mechanisms for termination of action should be demonstrable.

Similar to Fonnum's set of criteria, item 3 appears to be a catchall lacking specificity. The requirement should call for the generation of a change in potential within the post synaptic neuroplasm that is proportional to the change in potential of item 2.

While these lists are similar, as noted by Ottoson specifically, the ability of most of the putative neurotransmitters found in the literature to satisfy them is in considerable doubt, particularly with respect to neuron-to-neuron signaling and within the CNS in general.

Ottoson proceeds to discuss the role of various chemicals in the CNS based primarily on their

---

[68]Ottoson, D. (1983) Physiology of the nervous system. NY: Oxford University Press Chapter 8

[69]McIlwain, H. & Bachelard, H. (1985) Biochemistry and the Central Nervous System. NY: Churchill & Livingstone. Pg 414

physical presence rather than their function importance. He does note (page 198) the "potent depolarizing role of glutamic acid and aspartic acid on neurons throughout the central nervous system, which makes it difficult to discriminate between a non-specific action of these compound and their possible role as transmitters." The non-specific action is in fact the powering of all neurons through their neuro-facilitator role in the glutamate to GABA (or aspartate to glycine) conversion with the release of an electron. Ottoson even asserts, "Glycine is evidently a major inhibitory neurotransmitter in the spinal cord and brain stem, while GABA plays that part in the cerebral cortex." These chemicals are neuro-inhibitors in the terminology used in Chapter 3.

2.4.1.2 Requirement on an electrolytic neurotransmitter

The requirements on an electrolytic neurotransmitter are much simpler than those listed above. The requirement is for a change in the potential of the axoplasm of a neuron to be reproduced in the neuroplasm of one or more orthodromic neurons. As defined in this work, the electrolytic neurotransmitter is an electron. The challenge is to define how the change in the number of electrons on the capacitance representing the change in the axoplasm potential can cause a similar change in the potential of the orthodromic neurite. **Section 2.4.3** will explain this mechanism in detail. The same mechanism is used between both analog and phasic neurons.

2.4.1.3 The neurotransmitters, neuro-facilitators & neuro-affectors

Furness & Costa[70] struggled in 1987 to define the basic functionality of the enteric system by addressing the definition of neurotransmitters. They used the highly conceptual definition that, "Any substance that is released from a neuron and has an effect on that neuron or on a cell near the site of release can be regarded as a neurotransmitter." They ended their discussion with the observation that, "In practice, the criteria used in transmitter identification are empirical." This broad conceptual definition does not address how a signal is relayed from one neuron to one or more orthodromic neurons. Nor does it address the difference between neurotransmission between neurons and neurotransmission designed to affect muscle and other non-neural tissue.

Karczmar, Koketsu & Nishi[71] reviewed the history of the chemical versus electrolytic neurotransmitter in 1986. While they remain proponents of the chemical theory (page 13), their text presents extensive electrical data on the function, including excellent evidence for the unique operating characteristic of the neuron and synapse clearly describing an internal electrical diode (pages 87, 112, 165 & 166). They also develop the difference between a neurotransmitter and a "modulator" (page 65), discriminating between a modulator as an endogenous substance and exogenous toxins and pharmaceuticals. This work extends their concept of a modulator to either a neuro-facilitator or a neuron-inhibitor.

In his fourth edition in 2008 (which largely repeated the 2nd Ed and 3rd Ed.), Fuster wrote extensively about "chemical neurotransmission." While he asserted again that "Communications between neurons takes place by electrochemical transaction at synaptic junctions," his material does not support a fundamental synaptic mechanism. In fact, his figure 3.1 provides a smorgasbord of proposed mechanisms (in cartoon form) and relevant chemical constituents (over forty are named). The figure asserts there are six fundamental types of chemical synapse. Unfortunately, the material does not demonstrate in detail that any of the mechanisms and necessary chemicals are present within the in-vivo synaptic junction. It does not address the role of nitrogen oxide (NO) as a neuro-affector. Fuster groups the above chemicals into chemical families and describes their importance as neurotransmitters. This work will use his families to demonstrate these chemicals are either primary neuro-facilitators, primary neuro-inhibitors, secondary neuro-inhibitors or neuro affectors that play no direct role in the transmission of signals between neurons (**Section 3.2.2**).

Fuster notes the much greater prevalence (200x-1000x) of GABA in the brain than any of the first

---

[70]Furness, J. & Costa, M. (1987) The Enteric Nervous System. London: Churchill Livingstone, pg 55

[71]Karczmar, A. Koketsu, K. & Nishi, S. (1986) Autonomic and Enteric Ganglia. NY: Plenum Press

four "neurotransmitters" he discusses; norepinephrine, dopamine, serotonin and acetylcholine. He also characterizes GABA as a neuro-inhibitor while glutamic acid and aspartic acid are characterized as neuro-facilitators (his term excitatory neurotransmitters) in agreement with this work.

By 1990, the argument over chemical versus electrolytic neurotransmission was reversing again. Brown[72] noted, "Many examples of excitatory electrical synaptic transmission are now recognized, not only in invertebrate species but also in vertebrate species, including mammals. The essence of excitatory electrical transmission is that current flow generated in one cell (the presynaptic cell), for example by an action potential, passes across a synapse and leads to a depolarization in the post synaptic cell." And, "The gap junction provides a low resistance path for current flow between the two cells, and therefore there is little delay, since it is the speed of electronic transmission that matters."

2.4.2 Detailed history of the electrolytic and chemical synapses

Sherrington, the student, set the stage for understanding the synapse during the last of the 19th Century.. He deduced that neurons somehow communicate information, one to the next, by a mechanism that is fundamentally *different* from the way that they conduct signals along their axons. His contemporary, Ramon y Cajal continued to define the synapse. He proposed that neurons were distinct entities, fundamental units of the nervous system, that were *discontinuous* with each other. The synapse, a specialized apposition between cells, mediated the signals. The word "synapse" implies "contiguity, not continuity: between neurons, as Cajal himself explained it. As Boron & Boulpaep note (page 295), "Neurons come very close together at chemical synapses but their membranes and cytoplasm remain distinct. At electrical synapses, the membranes remain distinct, but ions and other small solutes can diffuse through the gap junction." The wording in the last sentence is a stretch, and he did not document such movement. It will be seen that only electrons pass through electrical synapses.

Cole provides a very early discussion of a unique property of the synapse[73]. Speaking in 1968 of two membranes in close proximity, he said: "The idea that a pair of unit membranes might have a negligible resistance–perhaps less than that of a micron thickness of electrolyte was so contrary to past experiences as to be quite unbelievable. Yet in a flurry of a few years of intense competition and cooperation, electrophysiology and electron microscopy forced us to believe that two membranes not only can but frequently do join to become essentially perfectly ion-permeable connections between cells. . . . Electrically these were usually known as electrotonic junctions, with resistances from 1 Ohm-cm^2 on down to practically nothing. . ." Although the semantics appear awkward now, he went on: "In contrast to the primitive use of an axon as a passive cable, these electrotonic junctions are highly developed structural elements which allow much the same electrical performance. As both these and apparent chemical transmitter connections appeared side by side we had an answer to yet another controversy; that of 'sparks vs. soup' of three decades before. From all of the lines of physical and chemical evidence we are led to a bimolecular membrane model with a hydrocarbon central layer about 25-50 Angstrom thick and a polar and protein layer of about the same thickness or less on each side, . . ." It will become clear below that his reference to ions passing through a synapse should have been limited to the negative charged particle, the electron. His reference to the vanishingly small impedance of the synapse to charge transfer is a characteristic of the "active diode" developed below.

Hayashi & Stuart inadvertently displayed the difficulty of explaining the operation of the synapse on chemical grounds in 1993[74]. Their specimen was a barnacle, *Balanus nubilus*. They found difficulty explaining the phenomenon they defined as synaptic adaptation using chemical

---

[72]Brown, A. (1991) Nerve Cells and Nervous Systems. NY: Springer-Verlag pg 53

[73]Cole, K. (1968) Membranes, Ions and Impulses. Berkeley, CA: University of California Press pg 517

[74]Hayashi, J. & Stuart, A. (1993) Currents in the presynaptic terminal arbors of barnacle photoreceptors *Visual Neurosci* vol. 10, pp 261-270

models. The phenomenon is easily explained as the transient performance of an active non-linear electrolytic circuit. Their concluding sentence falsifies their premise that Ca^{2+} is the mechanism controlling the phenomenon.

Barnes continued to display the difficulty with the chemical hypothesis in an extended commentary in 1994[75]. He chose to define a myriad of individual channels. His figure 4 is explained on entirely different electrolytic grounds in this work.

As noted in Pannese, it has only been in recent times that the biological community has accepted Cole's ideas and begun to consider the possibility that the junction between two neurons might have an electrical aspect. They are now speaking more frequently of a "gap junction" which is electrical in nature. This work differentiates between the electrolytic synapse, found between neurons, and the paracrine chemical synapse, found between a neuron and other tissue, primarily myocytes.

Sherman & Guillery have recently re-opened the discussion of the conventional wisdom related to the synapse[76]. Unfortunately, they parrot the conventional wisdom with a new twist. They focus on the putative ionotropic versus metabotropic forms of *receptors*. These complex explanations of the operation of a synapse are not supported here.

Pappas provided a good discussion of the junctions between cells in 1975 that can be expanded into a figure embracing more recent information[77]. **Figure 2.4.2-1** is modified from Pappas. It expands the concept of the chemical neuromodulator while accepting his variant of the electrolytic synapse (which he claimed was a bidirectional electrotonic case).

---

[75]Barnes, S. (1994) After transduction: response shaping and control of transmission by ion channels of the photoreceptor inner segment *Neurosci* vol. 58, no. 3, pp 447-459

[76]Sherman, S. & Guillery, R. (2001) Exploring the Thalamus. NY: Academic Press, pg 143.

[77]Pappas, G. (1975) Junctions between cells *In* Weissmann, G. & Claiborne, R. *ed.* Cell Membranes; Biochemistry, Cell Biology & Pathology. NY: HP Publishing Co. Chapter 9

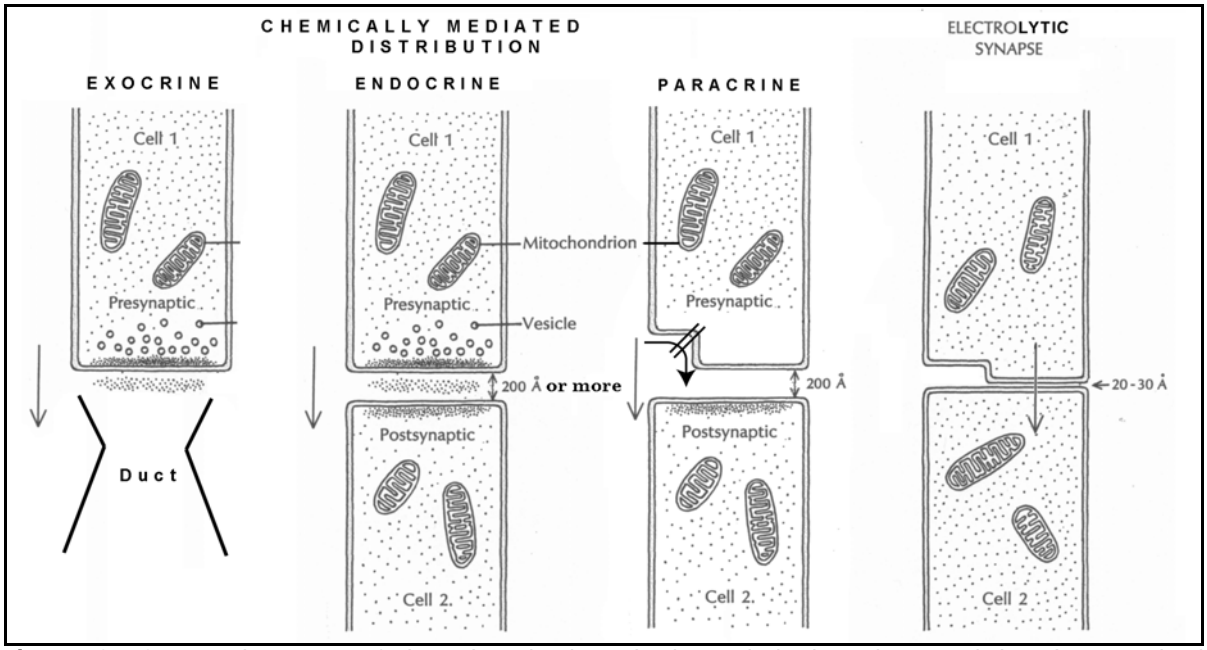

Figure 2.4.2-1 Caricatures of the chemical and electrolytic junctions. Right; the nominal electrolytic synapse showing the conventional electrolytic signal crossing the gap junction. Center, right; the paracrine chemical junction typically associated with muscle tissue as cell 2. The area between the two cells is typically confined by other tissue (not shown). The double bars represent a stereo-chemical site with release controlled by the axoplasm potential. Center, left; a basic caricature that can represent the endocrine chemical junction with no upper limit on the spacing between cells. Cell 2 can be far removed from cell 1. Left; A nominal exocrine situation with a duct through tissue to the external environment. See text. Modified from Pappas, 1975.

Beginning on the right, the electrolytic synapse (used in both tonic and phasic situations).is shown interconnecting two neurons via a gap junction of 20–30 Angstrom spacing. Pappas did not describe what features of the two lemma were used to determine this dimension. It may have been the centerline of the two dark lines in an electron micrograph, or it may have been the edges of those two dark features. A nominal value of 45 Angstrom is used in this work. Regardless of the spacing, the arrow associated with the electrolytic synapse represents the direction of the signal that is passed under the nominal *in-vivo* bias conditions (the axoplasm of cell 1 becoming more positive than the base of the synapse and the dendroplasm, or podaplasm of cell 2 remaining more negative than that base). The broader gap usually observed under light microscopy is shown to the left of the gap junction. As Pappas noted, the gap junction is always of the punctate form, with a typical diameter of 0.1 to 10 microns. On closer examination, it is found to consist of small individual regions in an orderly matrix. The diameters of these punctate structures is typically on the order of a hundred Angstrom or less.

The chemically mediated signal transmission originating at a neuron appears to be more complicated (three left frames of figure). As noted here, the chemicals released by the stage 7 neurons can be used under at least three different conditions. They can be released in a very confined (paracrine) space, typically associated with muscle tissue, or released in a less confined (endocrine) space within the organism, or into the external (exocrine) space.

The paracrine situation is believed to involve the stereochemical capture of a progenitor of the chemical actually released as a muscle stimulant. Prior to the establishment of an axoplasm potential conducive to such release, the progenitor is stored on the surface of cell 1. When the axoplasm becomes more positive than its resting potential (typically –140 to –154 mV), the progenitor reacts to form two substances, one of which is the major stimulant for the type of muscle involved. The 200 Angstrom gap can be considered the nominal minimum, the

effectiveness of the agent is controlled more by its degree of confinement which controls its mean time to chemical deactivation by other chemicals in the local matrix..

The more complex endocrine situation is shown in one of its forms. The conventional wisdom is that a chemical prepared within cell 1 and stored in the vesicles can be released into the surround under neural control. In the simplest case, the agent is released into a confined space and affects only one or a few orthodromic cells. However, the endocrine situation applies to a wide variety of agents (hormones) that can affect a wide range of cells at significant distances (meters) from the release point. Thus the chemical junction should be described as greater than 200 Angstrom (frequently much greater).

For completeness, the exocrine situation is shown on the left. The mechanism of hormone creation and release is similar to the endocrine case, except the agent is released into the external environment (which includes the digestive tract). In this case, cell 2 can be a receptor in a separate organism, or a food that is to be digested.

2.4.2.1 Summary framework

The primary, and exclusive, (ionotropic?) neurotransmitter, *between* the neurons of stages 1 through 7, is the electronic charge (or its saltatory surrogate, the hole). This charge traverses the *active* electrolytic junction known as the "gap junction" as demonstrated in **Section 2.4.3**.

No neuroaffector substances are associated with the gap junction. While other chemicals may be present in the vicinity, the only biological chemicals associated with the gap junction are the neuro-facilitators, glutamic acid, its backup, aspartic acid and their residues GABA or BAPA (**Section 3.4.2**). They are used in a metabotropic process, not in signaling.

This work has defined a new class of neuron that is designed to affect non-neural tissue, the neuro-affector neuron. Such a neuron may release a chemical material to support this action within a paracrine chemical junction. Alternately, the material may be released into a wider environment. This material will be called a neuro-affector substance. As noted above, the range of neuroaffector substances is quite large, and includes the hormones released by the hypothalamus and hypophysis.

The paracrine neuroaffector substances are typically acetylcholine and nitric oxide. They are typically released by one neuroaffector and stimulate one myocyte within a confined space generally described as an end-plate. The end-plate involves a larger gap between the neuron and the myocyte than does a gap junction. It is also designed to contain the neuroaffector substance for a finite period to optimize the tradeoff between maximizing the effectiveness of the stimulation and timely termination of the stimulation (believed to be by hydrolysis)..

The electrolytic synapse employing a gap junction, and the paracrine chemical synapse employing an end-plate appear to be the only forms of synapse required within the neural system.

In the evolution of this work, the similarity between the structural form of the Nodes of Ranvier and the so-called gap junction cannot be ignored. Close study indicates the functional part of the Node of Ranvier is a gap junction. The Node of Ranvier incorporates additional elements associated with homeostasis (**Section 2.6.3**).

In the electrolytic synapse, there is no requirement for a translation mechanism between the axoplasm potential and the release of a specific chemical substance. Nor is there a requirement for the release of a given number of molecules of the substance within the synaptic gap <u>that is proportional to the *change* in electrical voltage generated in the axoplasm</u>. Nor is there a need for the substance to cause the generation of an electrical potential within the orthodromic dendroplasm or podaplasm.

There is no requirement for the conexus forming an electrolytic synapse to be functionally different from the conexus found within a neuron.

In the paracrine chemical synapse, there is a requirement for a mechanism releasing the neuro-affector substance in proportion to the change in axoplasm potential. This stereochemical

process appears to be straightforward, as introduced in **Section 2.7.1.2** and addressed more fully in **Chapter 16.**.

Within the cardiac system, the synapses are primarily electrolytic and the form of the myocyte is unique to that system (**Chapter 20**).

A broader discussion of the variety of concepts proposed for the synapse can be found in Section 3.6.5 of "Processes in Biological Hearing[78]."

2.4.2.2 A reversible synapse current challenges the chemical theory

The measured data from Glowatzki & Fuchs introduces a very significant problem for any chemical theory of the synapse. The chemical theory of the synapse implicitly assumes the synapse is unidirectional with at least one chemical released by the presynaptic terminal. The chemical theory normally does not concern itself with any mechanism involved in creating a change in the electrical potential of the post synaptic terminal. The concept of the process being reversed doesn't appear. However, the experimental record is clear. The flow of current through the synapse is easily reversed by reversing the electrical biases applied to it. As expected by the Electrolytic Theory of the Neuron, the synapse is actually a three terminal device whose performance should be reversible by simply reversing the electrical potentials on the terminals. On the other hand, the chemical theory must either assume chemicals are released by the post synaptic terminal and collected by receptors at the presynaptic terminal, or postulate additional chemicals that can have the opposite effect of normal neurotransmitters when the electrolytic bias conditions are reversed. Neither of these situations is supported, or addressed, by the current chemical theory.

Within its operating range, a synapse can be represented by an active diode (a specifically wired three-terminal device). However, if its operating potentials are reversed while the base (interneural matrix connection) remains most positive, the three-terminal device will operate like an active diode in the opposite direction. This phenomenon is frequently encountered during patch-clamp experiments as reported in the literature. This is clearly represented in figure 3 of Glowatzki & Fuchs[79]. **Figure 2.4.2-2** redraws their figure slightly to show this situation. The current is shown as an excitatory post-synaptic current (ESPC) measured *in-vivo* at the synapse on the surface of a rat (AF #5) auditory sensory neuron. The current resulted from a tight-seal patch-clamp configuration. The location and character of their reference potential were not specified. As a result, their holding potentials are most likely relative to the resting potential of the dendroplasm contacted. They did not report the axoplasm potential of the sensory neuron or the steady state current through the synapse associated with their holding potentials. The randomly occurring waveforms have been aligned in time, and displaced in quiescent current for purposes of presentation. The temperature of the animal was not specified. Their exploratory experiments should be repeated under more controlled conditions in order to support future applied research. The typical operating range of a synapse is 20-30 mV with its output terminal, the neuroplasm contacted in this case, more negative than its input terminal, the axon of the

[78] http://neuronresearch.net/hearing/pdf/3Electrolytic.pdf#page=40

[79] Glowatzki, E. & Fuchs, P. (2002) Transmitter release at the hair cell ribbon synapse *Nat Neurosci* vol. 5(2), pp 147-154

hair cell in this case.

Glowatzki & Fuchs chose to draw a single straight diagonal line through their data points. This line represents a transimpedance of about 230,000 Ohms (transconductance of 4 micro-mhos) for the synapse. This is a very low impedance relative to most neural circuits and explains why some of the literature describes the synapse as of zero impedance. The range of their data at zero current was large, ±11 mV (n=4). This range is suggestive of the change in mode occurring in that region.

Two recent events have cause additional problems for the chemical theory of the synapse. Ottersen et al. have found a lack of glutamate (and a low ratio of glutamate to glutamine) in the vesicles associated with the synaptic body of auditory sensory neurons[80]. Siegel has also noted the growing evidence that the putative synaptic vesicle binding protein, synapsin, is absent from a number of synaptic bodies (ribbons) in the sensory neurons[81].

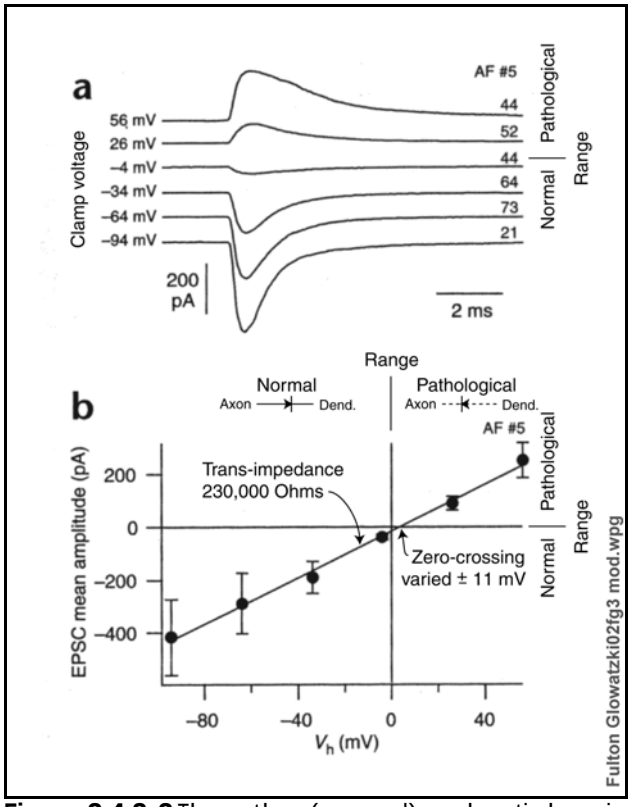

Figure 2.4.2-2 The ortho- (normal) and anti-dromic operation of a synapse. a; currents recorded at a post synaptic plasma under voltage patch-clamp conditions. Voltages are original holding potential before a step change. Numbers on right indicate number of waveforms averaged to obtain the trace. Eliminating the trace at –94 mV improves the symmetry of the graph. b; the transfer function of the synapse obtained by varying the collector potential of the Activa forming the synapse. Extended from Glowatzki & Fuchs, 2002.

2.4.3 The Electrolytic Synapse

The synapse of interest in neural signaling is a very specific structure. It is often labeled a tight junction or gap junction morphologically . These conceptual labels are frequently shared with other non-signaling structures as discussed in the next few paragraphs. In this work, the label tight junction will be reserved for a passive lap joint between lemma. Additional clarity will be developed in **Chapter 5** based on Vardi et al. The recent work in electron microscopy, documented by Pannese[82] and presented in detail by Vardi[83] and others, when combined with the physical chemistry associated with a gap of less than 10 nm (100 Angstrom) between the axon and a neurite, demands the electrolytic mode of signal transmission be recognized.

If one places two of the fundamental neurons of **Section 2.2.5** in series, the configuration between the axon and dendritic conduits appears remarkably similar to that between the

---

[80]Ottersen, O. Takumi, Y. et al. (1998) Molecular organization of a type of peripheral glutamate synapse: the afferent synapse of hair cells in the inner ear *Prog Neurbiol* vol 54, pp 127-148

[81]Siegel, J. (1992) Spontaneous synaptic potentials from afferent terminals in the guinea pig cochlea *Hear Res* vol 59, pp 85-92

[82]Pannese, E. (1994) Neurocytology. NY: Thieme, pp 5 & 80-116

[83]Vardi, N. Morigiwa, K. Wang, Y. Shi, Y-J. & Sterling, P. (1998) Neurochemistry of the mammalian cone 'synaptic complex' *Vision Res*. vol. 38, pp 1359-1369

dendritic and axonal conduits of either of the individual neurons. The only difference is the fact that the region between the two juxtaposed conduits is in contact with the interneural matrix instead of being enclosed by a podaplasm as shown in **Figure 2.4.3-1**. If the two conduits are juxtaposed with the necessary spacing, this configuration has the potential for exhibiting "transistor action." It is only necessary to provide the required electrolytic potentials. The nominal junction dimensions are lemma thicknesses, 75 Angstrom and base thickness of 45 Angstrom.

The label neurite has been used instead of the more familiar dendrite to support the general case. A neurite can be either a dendrite or a podite. The similarity to the conexus within a neuron is not coincidental. Whether the conduit on the left is labeled an axon or a neurite (or later an axon segment) is a formalism. The basic electrical configuration of frame **A** is the same. As seen in frame **B**, the only potential difference is in the physical location of the power sources. As will be developed later for the case of long axon segments, additional power sources may be associated with a single conduit. These additional power sources, and other chemical transfer activities may be found within the synaptic gap but outside of the 280 Angstrom wide area of the gap junction (discussed below). Another characteristic of a synapse is shown conceptually in frame **C**. It is typically biased to form an "active diode," a three-terminal device wired to act as a two-terminal device. The pre-synaptic axon is supported by a soma and nucleus as shown. The post synaptic neurite is supported by a separate soma and nucleus (not shown). Hence, the conexus related to a synapse is not located within a specific neuron. **The electrolytic synapse represents a fundamental physiological unit of the neural system that is extra-neural.** Such a conexus typically exhibits an area of charge concentration on one side of the junction under the electron microscope.

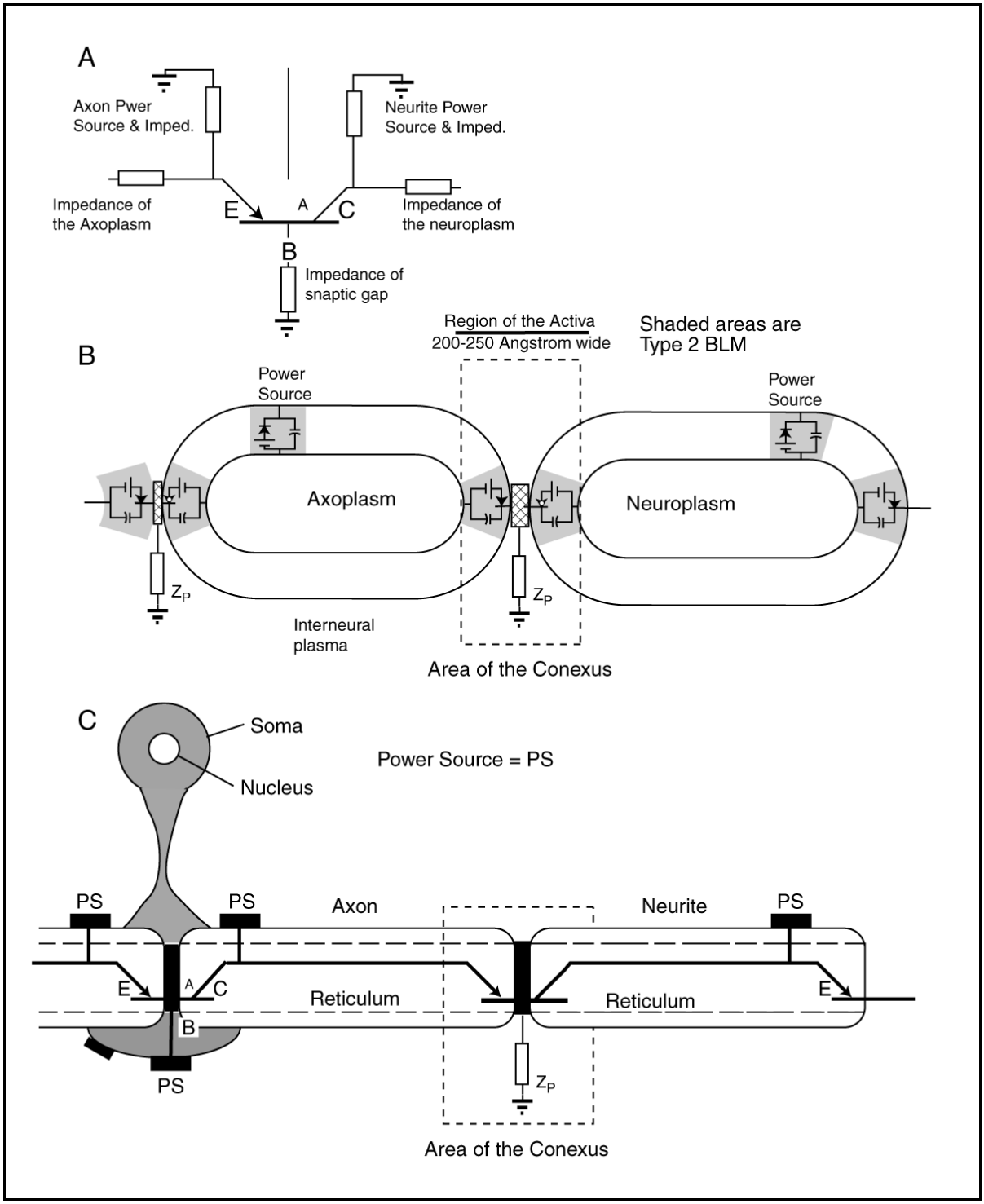

Figure 2.4.3-1 Overlay of electronic circuitry of a fundamental synapse on its topography. Note the similarity to figure 2.2.5-2(C). Only the labels have been changed. The overall synapse lies within the dashed boxes. See text.

By application of appropriate voltages to the plasmas on each side of these juxtaposed cell

walls relative to the material in the space between the walls, transistor action will occur[84]. .

To achieve this result, the transistor formed is employed in what is conventionally called the common base configuration. This configuration does not normally exhibit any voltage amplification and the ratio of the output current to the input current is greater than 0.99. A conexus containing an Activa used in this "gap junction" role (with a gap of between 40 and 100 Angstrom) will be defined as a Type BS with the S derived from the name synapse.

Section 2.3 has introduced the problem of selecting the potential(s) associated with each conduit power supply in order to maintain the required bias conditions for a group of conexuses connected in series. The potential of the neural matrix is not necessarily uniform throughout this figure. This problem will be addressed further in **Chapters 4 & 6**.

When two conduits of separate neurons are brought into close proximity without meeting the above operational considerations, the situation is just *en passant*; the conduits do not pass a signal between them. In some cases, type 2 lemma of two neurons are found in close proximity, separated by a pool of extra-neural material associated with the electrostenolytic mechanism powering each conduit. This close relationship is readily identified by electron microscopy where both lemma show a concentration of charge in their type 2 areas. The overall area does not represent a synapse

Within the central nervous system (CNS), 1000 synapses are typically associated with the axon of each neuron. In the peripheral nervous system (PNS), the number is lower but probably still exceeds 100 on average, counting both synapses and the specialized Nodes of Ranvier. The number of Nodes of Ranvier is large but generally less than 100 for any given stage 3 signal projection neuron.

- - -

The proposition that the synapse is an electrical connection between two neurons does not eliminate the role of chemistry in the vicinity of the junction. Chemistry is seen to play the same role at the external Activa found at a synapse that it plays in supporting the internal Activas of the neural system. It provides the source of energy that powers the active device.

2.4.3.1 Introduction EDIT

The conditions described above for "transistor action" does not require that the action occur within a single cell membrane. It can occur between two adjacent cells under the prescribed conditions, i. e:

> + each membrane "system" must be operational; that is the membrane must be of the right molecular constituency and be contacted on each side by an appropriate electrolyte.
>
> + the input membrane must be forward biased so as to conduct current relatively easily and the output membrane must be reverse biased so that it does not easily conduct current.
>
> + the distance between the adjacent membrane walls must be less than the distance required for transistor action, i.e., a charge passing through the input membrane will continue on and pass through the output membrane regardless of the polarity of the output membrane.

These conditions are easily met at many places within the retina. It appears an Activa can be created at any point where a cell wall enclosing a region of axoplasm is brought within the appropriate distance of a cell wall enclosing a region of dendroplasm (and the above electronic conditions are met). There is no requirement that the cell walls be especially modified

---

[84]U.S. Patent --Fulton, J. (1998) Active Electrolytic Semiconductor Device

to achieve "transistor action" as long as they present the impedance of a diode. The contact areas can be quite small or can be extended depending on the overall current carrying capacity required. **The synapse between two neurons is the site of an active electrolytic semiconductor device, an Activa.**

Under the above conditions, it is possible for a dendrite to form gap junctions exhibiting "transistor action" with as many axons as desired. It is only necessary for the dendrite areas of type 2 lemma to "grow" to within the appropriate gap spacing of similar type 2 lemma of each of the target axons. By this means, the dendrite collects a current from each axon with a magnitude proportional to the voltage difference between the axoplasm and the dendroplasm, the area of the contact and the diode characteristic. The total current collected can then be passed to the axon of this cell through its internal Activa.

2.4.3.2 Recent empirical data

Pannese has provided a recent description of the so-called electrotonic or gap junction that is in excellent agreement with the above description except for one point[85]. He describes (this) mode of transmission via a gap junction as distinguishable "from chemically mediated transmission since (a) it is basically reciprocal, . . ." (Emphasis added). He gives no reference for this assertion that is in opposition to the position of this work. **Under *in-vivo* conditions, the transmission mode across a gap junction is asymmetrical to the point of being unilateral**. One of the simplest representation of "transistor action" occurs at such a junction, and the forward transfer characteristic of the Activa, is that of an electrical diode.

> It may be that Pannese collected data under non-operational conditions. If the potentials of the emitter (axon) and collector (neurite) of a synapse are interchanged, the conexus will operate as an active diode in the opposite direction. All Activa, and in fact all junction transistors, are reversible in this way.

Pannese provides a long list of the locations of gap or electrotonic junctions within various species of animals. This type of junction is obviously common (if not, as proposed here dominant) in the neural system. Pannese also provides a caricature of the possible forms and locations of synapses between neurons based exclusively on the exterior morphology of the cells. The functional names resulting from that analyses are a bit fanciful. If the internal cytology of the cells is studied, it is found that all of his designations are represented by a synapse between an axon conduit and a subsequent neurite conduit in the orthodromic signal path.

The electron micrograph in his figure VI.1, at about 90,000X, provides an excellent cross-section of a synapse at high resolution. It clearly demonstrates the bilayer character of each membrane, the close spacing associated with the liquid crystal lattice of semi-metallic water between the axon and the neurite, and the variety of inclusions found within the respective plasmas. These inclusions include the reticulum that has formed a hydraulic delta, similar to that of a river, as it approaches its termination at the surface of the conduit. His figure VI.2, at 44,000X, is more complex. It shows multiple synapses between four axons and three neurites (there being no definitive way of determining whether these structures are dendrites or podites). Some degree of darkening can be seen in the figures at locations where that effect is usually related to concentrations of electronic charge.

This work has developed the fact that the coupling between neurons (an external coupling) is not fundamentally different from the coupling between the various internal conduits of a neuron. These internal coupling include both the Nodes of Ranvier and the previously undefined Activa at the junction of the dendrites, podites and axon. This section will develop the detailed characteristics of such external couplings, synapses.

2.4.3.3 The schematic of the electrolytic synapse

While the morphology of the electrolytic synapse is discussed in greater detail in Chapter 5, it is useful to complete this discussion with a caricature of the fundamental synapse. The literature

---

[85]Pannese, E. (1994) Neurocytology. NY: Thieme Medical Publishers pg. 88-116

provides many copies of a simple concept of the synapse as a chemical interface between two neurons. A more advanced cricature is shown in **Figure 2.4.3-2**. Frame A shows an interface with a relatively wide gap easily discernable by light microscopy and a much narrower gap only observable by electron-microscopy. This gap-junction is between 50 and 100 Angstrom wide, depending on how the imprecise edges of the lemma are defined. Frame A of the figure is divided into two major zones. Those activities below the center line related to signaling, and those above the line related to support functions. While illustrated as asymmetrical, the functional representation is nominally symmetrical about the center of the gap-junction (cylindrically symmetrical about the arrow). The overall gap-junction frequently consists of an array of smaller diameter individual gap-junctions, or unit Activa, described in the next paragraph.

The electrostenolytic process powering the axon is shown explicitly. The biasing of the neurite is not shown because it may take several forms. Like in the Activa within the neurons, there is no transfer of ions or molecules between the two sides of the gap-junction. The gap between the presynaptic and post synaptic membranes is only 50-100 Angstrom and is filled with an impervious liquid crystal of semi-metallic water.

> It is important to note that electron-microscopists frequently complain, when preparing a sample of a synapse for examination by freeze-fracture techniques, that it is necessary to fully remove a small amount of water on the surface of the axolemma to avoid problems with their vacuum system.

The upper part of frame A shows the presence of a variety of elements, and many caricatures show a variety of free chemicals as well in support of neural operation. In general, the presence of these element s and chemicals are related to homeostasis rather than signaling. Although the concentration of these chemical constituents change slightly with signal operations, this is a secondary effect due to electrostenolysis and other local processes.

> Although the literature generally equates these chemical changes to the signaling function and defines some of the chemicals as neurotransmitters, this association is not required in this work.

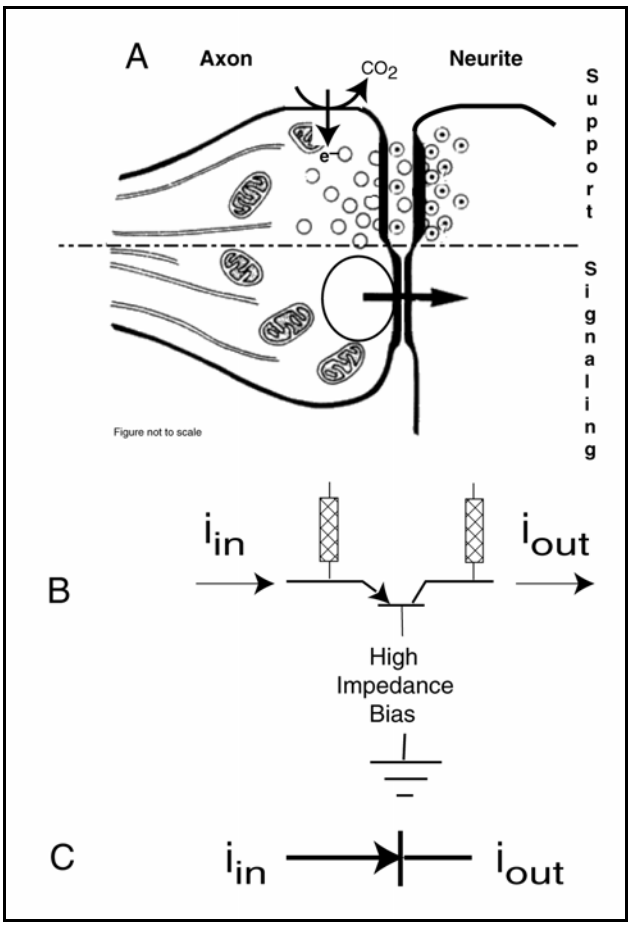

Figure 2.4.3-2 The electrolytic synapse showing signaling and support functions. A; while the support area (above centerline) includes a variety of chemicals, these are not involved in signal transmission. The electrostenolytic process powering the axoplasm is shown explicitly. Signaling is facilitated by a three-terminal Activa that can be described as a diode limiting the direction of signal flow to that of the arrow. B; The schematic of the three-terminal Activa with a high impedance in the podalemma circuit. C; the equivalent "active diode." See text.

The lower portion of frame A shows a typical synaptic junction, or synaptic disk, supporting the transfer of an electrical signal from an axon on the left to a neurite on the right. The signal is unidirectional as indicated by the arrow. The large open circle is an early representation of the vesicles associated with the synapse. See below.

2.4.3.3.1 The cytology of the synaptic disks

From a structural perspective, it is virtually impossible to maintain a constant spacing between two parallel membranes as shown in the above figure. A different fundamental architecture is needed at the detailed level. The proposed detailed structure is shown in **Figure 2.4.3-3**. This configuration solves the structural problem of maintaining planarity and introduces scalability. The size of the overall synaptic disk depends primarily on the current carrying capacity required of the connection. As indicated in the previous section, each synapse of the pedicle synaptic complex employs a group of synaptic disks as the connection between an axon and a neurite (dendrite or podite). Each of these synaptic disks has a diameter of 0.3-0.5 microns and consists of an array of "unit Activa." The sizes shown are in Angstrom and these features can only be resolved by high magnification electron microscopy. The structure can be compared to that visualized by the group led by Robertson[86].

Groups of unit Activas are frequently observed forming disk shaped arrays within the gap junctions of synapses. These arrays should not be confused with vesicles or gates forming pores in either of the membranes.

The details of this structure have been addressed by Vardi et al. (**Chapter 5**). The vesicles shown along the upper edge by open circles correspond to those of the previous drawing. They are connected to the reticulum of the axon through the synaptic ribbon. A similar row of vesicles is shown along the bottom edge. In fact, both of these arrays are two-dimensional as shown in the cutaway view at lower left. The vesicles place structural pressure on the two bilayer membranes so as to establish a fixed spacing between the membranes. In the regions between the upper and lower vesicles, this space is so small that only water molecules can fill it. These molecules assume an impervious liquid crystalline structure in these areas known as semi-metallic water.

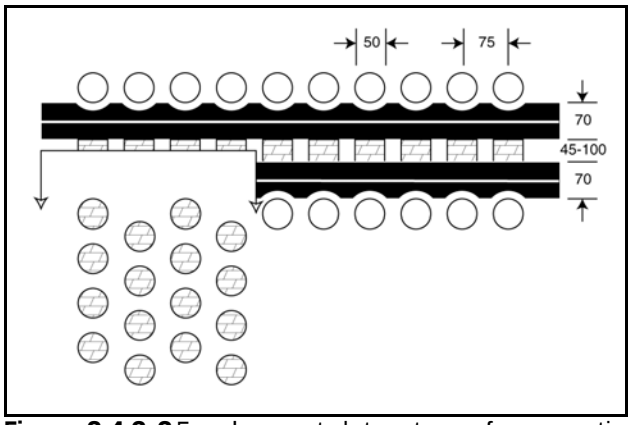

Figure 2.4.3-3 Fundamental structure of a synaptic disk of a photoreceptor pedicel. Dimensions are in Angstrom. Open circles are vesicles on each side of the junction. Upper bifurcated bar is the axolemma of the photoreceptor cell. Lower bar is the post synaptic lemma. Hatched areas are the active regions between the two lemma. Cutaway shows the configuration of these active regions.

2.4.3.3.2 The electrolytic synapse as an "active" diode

Frame B of [**Figure 2.4.4-1**] shows the synapse schematically as a conexus containing an Activa. The cross-hatched impedances are complex. The podaplasm impedance is shown as a high resistivity impedance. Such an impedance insures the Activa is always biased into the conductive region when a signal is applied to it. As a result, the current out of the Activa is a precise copy of the current into the device.

Frame C of the figure shows the simplified equivalent circuit of such a conexus. Note, whenever the axon of the junction is positive, this diode is always biased into its conducting mode. As a result, it does not "rectify" any signal applied at the axoplasm terminal. The signal at its output is a true replica of the signal at its input. As noted in **Section 2.2.2.9**, the current transfer efficiency of an Activa is very high, with typical measured values near 99.5%. While these transfer efficiencies have been measured in the electro-physiological laboratory, researchers have had

[86]Zampighi, G. & Robertson, J. (1973) Fine structure of the synaptic discs separated from the goldfish medulla oblongata. J. Cell Biol. vol. 56, pp92-105

difficulty describing the results based on a two-terminal model. Series resistances as low as 0.01 Ohms have been reported but these values have seldom been confirmed by independent tests, usually because of differences in laboratory instrumentation. Using a three terminal model makes the task simple. Rather than speak of a series impedance between the input and output terminals, the correct representation is to define the current transfer efficiency of the active diode device.

The I-V characteristic of the normal synapse is as shown in **Figure 2.4.3-4**. When biased to the right of the zero-crossing, the circuit acts as a thresholding device suppressing noise associated with the quiescent condition. Under this condition, it can be considered an "Active" diode. It is used in this mode when summing signals at the input to a signal processing neuron. It is also valuable in the transfer of monopulse signals between stage 3 signal projection neurons. When biased to the left of the zero-crossing, it acts as a very high efficiency linear signal transfer device, the conventional analog synapse.

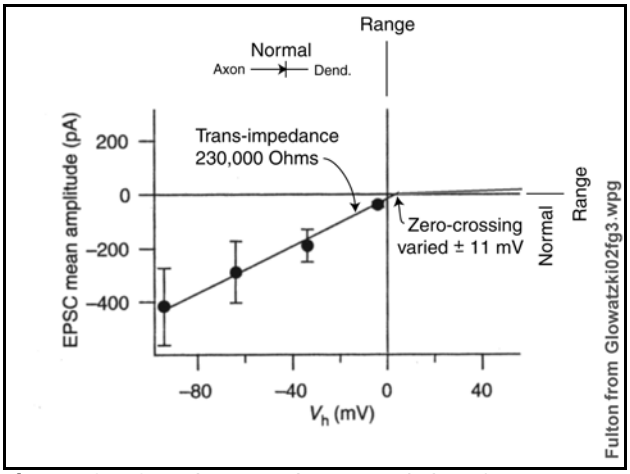

Figure 2.4.3-4 The I-V characteristic of a synapse as an "active" diode. When biased to the right of the zero crossing point, the synapse acts as a thresholding circuit thereby suppressing noise associated with the quiescent condition. Data points from Glowatzki, 2002.

2.4.3.4 Powering the electrolytic synapse

Under static and dynamic conditions, the electrical potentials of the presynaptic axoplasm and post synaptic dendro– or poda– plasm is provided by their respective neurons. This is true for both the analog and phasic electrolytic synapse.

2.4.3.5 The amino acids as neuro-facilitator, not neurotransmitter

Efforts to define a chemical substance to be passed across a synaptic junction, for purposes of signaling, have a long history within those investigators with a formal education in chemistry. They have found it extremely difficult to characterize a neurotransmitter based on functionality and performance[87]. In general, materials have been defined as neurotransmitters based on their ubiquity near neurons and their ability to affect neural actions long term (over periods measured in seconds or more). There has been little success in quantifying the amount of a chemical compound released by an axon and received by a dendrite.

In recent times, beginning in the 1960's, there has been a concerted effort to coopt the well accepted conceptual role of the glutamates in energy manipulation and hypothesize the use of these materials as chemical neurotransmitters[88]. This effort, in support of a function that is not required based on this work, has been relentless. Brown has hedged his bets by saying "It is likely that the amino acid used as transmitter is separated from that used in general metabolic pathways, perhaps by its localization in vesicles." This position would seem to leave large amounts of glutamates available on the surface of neurons for electrostenolytic purposes with a much smaller amount confined within vesicles and possibly in the synaptic space. One of the finding of this work is that the synaptic space within the gap junction is filled with a liquid crystalline material, semi-metallic water. The low solubility of any amino acid in this liquid

[87]Mandell, A. Spooner, C. (1968) Psychochemical research studies in man. *Science*, 27 Dec. vol. 166, pp 1442-1452

[88]Brown, A. (1991) Nerve Cells and Nervous Systems. NY: Springer-Verlag pg 76

crystalline material and the laws associated with Brownian Motion in such a narrow space suggest that no chemical neurotransmitter can migrate across this gap.

This work has developed the role of glutamic acid (glutamate), and its backup aspartic acid (aspartate) as the principle sources of energy in the neural system *in detail* (**Chapter 3**).

2.4.3.6 The gap junction is a barrier to ions EDIT

The synapse, the junction between the axon of one neuron and the neurite of another has been studied for a long time via light microscopy. A large mass of literature has evolved based on this imagery and the presumed chemical nature of the signal transmission across this gap. Unfortunately, this literature has been largely limited to a conceptual foundation. This foundation has not been able to explain the most basic features of the synapse; how an electrical potential elicits the release of chemicals by the axon or how the arrival of a chemical at the dendrite elicits a current in the dendrite or a potential between the dendrite and the surrounding medium. The details of the synapse recently revealed by the electron microscope did not play a major role in the development of the above literature.

The micrographs produced by the electron microscope have shown a structure for the synapse that is drastically different from that portrayed by the light microscope. It not only shows the finer structure that was never available earlier, it also shows the location of charges in these structures. The imagery shows an uncanny similarity to the imagery of man-made transistor devices. This resemblance applies both to the dimensions of the structures and to the charge distributions. This imagery provides strong support for the proposition of this work that the synapse is an active electrolytic semiconductor device based on liquid crystal technology.

Pappas has provided information supporting the position of this work that large molecules do not cross the synapse in the gap area[89]. He performed a series of experiments using "certain marker substance–their molecular weight must be less than 200–are injected intracellularly into one of several cells connected by gap junctions." He then noted, "Immediately afterwards, the marker is seen to pass rapidly into adjacent cells but *not* into the intercellular spaces." [emphasis in the original] The next experiment injected lanthanum, which he says we know cannot cross the plasma membrane, into the fixative associated with the cells. He says, "it will still penetrate the gap junction insinuating itself between the 20 Å to 40 Å extracellular space or gap." He describes the gap saying, "the electron microscope reveals a hexagonally arranged mosaic of more-or-less circular areas into which the lanthanum has not penetrated. Several conclusions can be drawn from these experiments. First, molecules with a molecular weight greater than 400, such as the typical putative neurotransmitter, cannot cross the gap junction. Second, a heavy metal can diffuse into the gap region but cannot diffuse into the actual liquid crystalline lattices of semi-metallic water forming the active electrolytic junctions critical to the operation of the Activa present and key to the electrical transmission of neural signals across the gap. Pappas concludes with "Evidently, then, the gap junction consists of an array of channels, or pores, passing through the cell membrane." This work prefers the designation channels to pores and proposes the channels are electronic in nature and incapable of transporting heavy ions or molecules.

2.4.4 The chemical synapse–or paracrine junction

The paracrine synapse is the easiest to study; it is the easiest to locate (between a neuron and a myocyte of striate muscle) and it is typically large (compared to an electrolytic synapse). It is the synapse of the popular press and introductory biology. While stage 7 neuro-affector neurons release a variety of neuro-affector substances, it is only the paracrine neuro-affector neurons that do so in a confined space. This chemical synapse will be developed more completely in **Section 2.7.1.2**.

A related, semi-endocrine synapse is reported to be used in the amygdala to release dopamine into the CNS on the brain side of the brain/blood barrier (LeDoux in **Section 12.5**). Ottoson (page

---

[89]Pappas, G. (1975) Junctions between cells *In* Weissmann, G. & Claiborne, R. *ed.* Cell Membranes; Biochemistry, Cell Biology & Pathology. NY: HP Publishing Co. Chapter 9, pg 89

197) quotes Baldessarini[90] showing dopamine is not released by the amygdala but by the tegmentum and S. nigra of the midbrain.

2.5 Neural applications of electrotonic, or analog, neurons

The vast majority of the neurons within the neural system receive analog signals via their neurite structures, manipulate those signals algebraically and distribute the resulting signals via the pedicles of their axons to multiple orthodromic neurons. This section will address the operation of a variety of neuron types labeled primarily by their morphological designations to avoid confustion..

In the following discussion, it will be seen that some of the signals are reversed in polarity as they pass along the signal path. This functional process frequently eliminates any correlation between the nature of the signal and the concept of hyper- or de-polarization with respect to the signal at a given point.

2.5.1 Morphologically bipolar cells of Stage 2

The bipolar neuron of the retina is probably the best characterized of all neurons. It is the simplest type of neuron and has been used as the prototype in **Section 2.2**. As noted there, the morphologically labeled monopolar and bipolar neurons are functionally the same. The position of the nucleus relative to the neurites and axon is irrelevant. The bipolar neuron has only one input structure, a dendrite, connected to the emitter of the Activa within it. While this dendrite may be highly ramified in support of well over 1000 synapses in some applications, all of the inputs are summed using a diode-based summing network as discussed in **Section 2.3.2.2**. The axon structure of the bipolar neuron can also ramify in support of multiple synapses with orthodromic neurons. However, in some cases, multiple neurites from orthodromic neurons synapse with pedicles of the axolemma that appear to be integral with the soma just like some of the input synapses. These are not soma-neuritic synapses, they are functionally axo-neuritic synapses.

2.5.1.1 Topology of the morphologically bipolar cell

The general morphology of the bipolar cell is straight forward although it is sometimes difficult for investigators to definitively describe the end structures associated with the dendrites and axons. The general cytology and topology of the bipolar cell is shown in detail in **Figure 2.5.1-1(a)**. This figure can help in understanding the morphology as well as the topology of the cell. The dendritic conduit of the cell is shown on the left. The wall of the conduit consists of several zones reflecting different types of BLM. Most of the wall acts as a simple insulator to the flow of all fundamental charges, ions and large molecules. It is probably made up of a symmetrical bilayer membrane at the molecular level (type 1 lemma). In areas juxtaposed to various other neurons, the cell wall consists of a zone(s) of asymmetrical bilayer membrane exhibiting an electrical characteristic typical of a diode (type 2 lemma). The area of this diode is a parameter controlling the reverse cutoff current of the diode and therefore its impedance. Two active connections to other neurons are shown as well as one potential or failed connection. Also shown is a zone of the BLM associated with the electrostenolytic process establishing the quiescent potential of the dendroplasm with respect to the surrounding matrix. Finally a zone is shown where the dendritic conduit is juxtaposed to the axon conduit. This juxtaposition comprises the Activa within the neuron. The axon conduit is shown to consist of a similar set of zones of BLM. The majority of the BLM is probably symmetrical at the molecular level and an insulator. One area is shown supporting an electrostenolytic function for biasing the axoplasm. Two areas are shown as connecting to following neurons via synapses..

The electrostenolytic power supply of the axon is well characterized as discussed in the next Chapter.

---

[90]Baldessarini, R. (1979) The pathophysiological basis of tardive dyskinesia *Trends Neurosci* Volume 2, pp 133–135

The power supply to the dendroplasm is shown as "potential" because the bipolar neuron may be "self-biasing" in some situation, without requiring an electrostenolytic supply. In that case, the supply shown may only be a resistive impedance.

The juxtaposition of the two conduits and the associated electrical path to the surrounding matrix through the podaplasm allows the Activa to function as an active electrical device when it is properly biased. It appears from the literature that, in the bipolar neuron, the base connection of the internal Activa is connected to the surrounding fluid environment via a low impedance path. This condition removes internal feedback as a factor in the operation of the bipolar neuron. However, the poditic electrostenolytic process may be important in establishing the overall bias structure of the neuron. The dendrite is seen to exhibit one or more input sectors along its surface and it is conceivable that in certain physical locations the surface of the dendrite forms a continuous proto-Activa providing synapses anywhere along its length. Such a continuous or quasi-continuous surface is found among the stage 1 sensory neurons.

2.5.1.2 The Electrolytic Circuit

Figure 2.5.1-1(b) shows the electrical circuit of this cell. This circuit is a non-inverting current repeater for all input signals. The current delivered by the collector into the axoplasm is essentially identical to the current entering the emitter of the Activa. However, the delivered current may be at a higher impedance level, thereby providing power gain.

In the absence of input current, the circuit of the bipolar neuron is usually biased near cutoff by the various batteries and electrostenolytic processes involved. The axoplasm is therefor at its highest potential under quiescent conditions, i. e. fully polarized. Upon the application of a signal, the axoplasm becomes depolarized, the voltage relative to the interneural matrix drops.

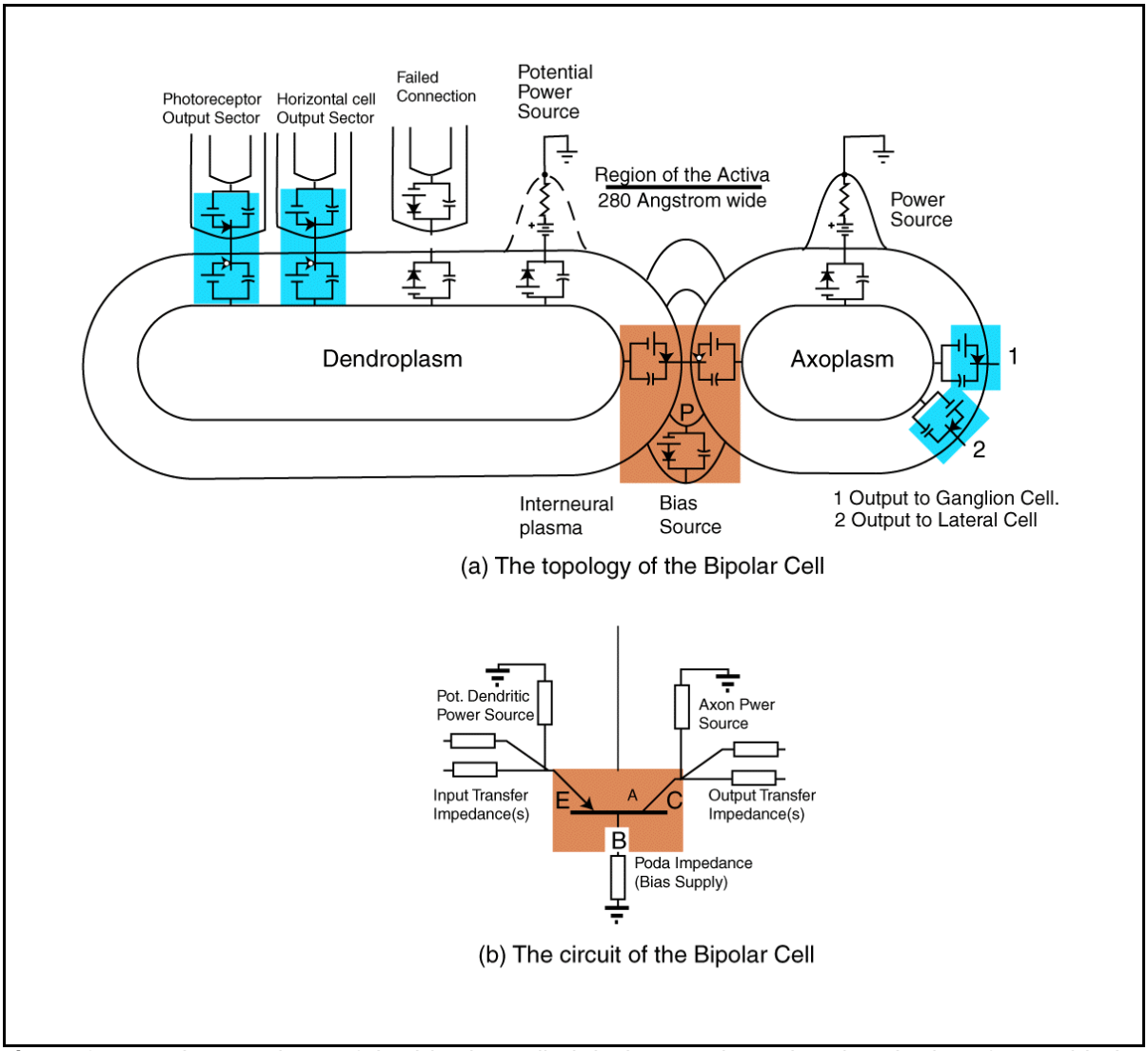

Figure 2.5.1-1 The topology of the bipolar cell. (A); the topology showing the interface with the surrounding circuits. (B); the schematic circuit of the bipolar cell. See text.

The establishment of the quiescent potential between the emitter and the base of the Activa within the bipolar neuron is highly dependent on its associated neurons (as it is in any direct coupled system).

In many cases, the bipolar neuron is basically in cutoff in the absence of any input signal (axoplasm potential near the intrinsic electrostenolytic supply potential). When a signal is received at one or more of its dendritic synapses, the net current flowing through the synapses makes the emitter more positive relative to the base and the net signal waveform is reproduced in the collector (axon) circuit.
In some cases, it may be desirable to operate the axon at a lower quiescent potential and some form of biasing is employed to accomplish this. This may be by means of an electrostenolytic supply associated with the dendroplasm or the podaplasm.

2.5.2 The lateral (differencing) cells of stages 2 through 6

The morphologically designated lateral neuron is the prototype of the differencing amplifiers used widely in stage 2 signal processing and in stage 4, 5 & 6 where signal manipulation is a primary function. They exhibit signal inputs to both the emitter and base terminals of the Activa. These inputs frequently involve highly ramified dendritic and poditic trees. These neuron have frequently been labeled bi-stratified neurons (see **Chapter 5**). The poditic tree has frequently been labeled the basal dendritic tree. When there is only one dendritic and one poditic tree, the neurons are frequently described as pyramid cells. These pyramid cells can be and frequently are drawn as triangular in two dimensions. When the cells involve more than two poditic trees radiating from a disk perpendicular to an axis defined by the root of the dendritic tree and the root of the axon, they are generally described morphologically as stellate (star-like) neurons.

Other common morphological names for neurons of this functional type are horizontal neurons (in the retina particularly), amercine (axonless) neurons and sometimes interplexiform neurons. These variations in morphological names are due more to packaging constraints than to any difference in their functional roles. They all have an axon formed by an axolemma but the axolemma may not be distinguishable from the remainder of the neurolemma by optical means. The axon is normally identifiable by electron microscopy, particularly by the charge distribution along the surface of the neurolemma.

The term interplexiform neuron evolved from studies of the retina at low light microscope magnification during the 1970's. The retina had been found to contain distinct layers of cell nuclei. The cells associated with the inner and outer plexiform layers became known as interplexiform neurons in some circles, even though they were clearly identifiable more specifically as either bipolar, lateral, horizontal or amercine neurons by other investigators. Thus, interplexiform neuron can be considered a global morphological designation for either bipolar or lateral functional neurons. No formal definition of this designation could be found in the literature, except with respect to the plexiform layers.

2.5.2.1 The topography of the lateral cells

The lateral neurons exhibit two independent input structures that are not summed algebraically at the dendritic input to the Activa. They exhibit two input structures that appear similar to a histologist but enter the cell at distinctly different locations. One is the conventional dendrite structure normally connected to the emitter of the Activa. The second neurite, the basal dendrite, pseudo-dendrite or *podite*, is a similar structure but it connects to the base structure of the Activa. This characteristic provides a new dimension of circuit flexibility to the neuron. Shepherd[91] shows a good electron-micrograph of a cell of this class which he credits to his co-workers, Hersch and Peters. Unfortunately, it is imbedded in a surrounding structure that is not related to the functional aspects of the cell itself. The cell is labeled a pyramidal cell with an apical dendrite and a basal dendrite (podite) as well as the normal axon hillock and other conventional structures, **Figure 2.5.2-1**. The plane of the micrograph does not appear to contain the Activa. However, it is reasonable to say the dendrite and the axon are separated by structures related to the podite. To demonstrate the unique functional role of the two arborizations, it is necessary to examine their role in the cytology of the cell at x50,000 or better under an electron microscope.

---

[91]Shepherd, G. (1988) Neurobiology. NY: Oxford University Press pg. 43

The above figure can be compared with **Figure 2.5.2-2** showing the proposed idealized structure of the same type of cell at the cytological level (although at a slightly different orientation).

A key fact is illustrated by this figure: the dendritic compartment and the dendroplasm extend well into the interior of this neuron type. As a result, the morphological designation of a synapse as axo-somatic refers functionally to an axo-dendritic synapse. The designation axo-somatic is meaningless functionally.

The figure is drawn to support the idea of two distinct areas of poditic input, at E & F. If location E should be ramified, the figure would exhibit two poditic trees in the plane of the neuron; this is the simplest version of the stellate neuron.

The axon of this neuron is not shown in detail. While the axon may be long and even ramified near its pedicles, this is not necessary. Many neurons appear axon-less with their pedicles located immediately adjacent to the hillock. While these have been labeled amercine (axon-less) neurons in the retina, all of the stage 1 sensory neurons of the auditory modality exhibit this configuration.

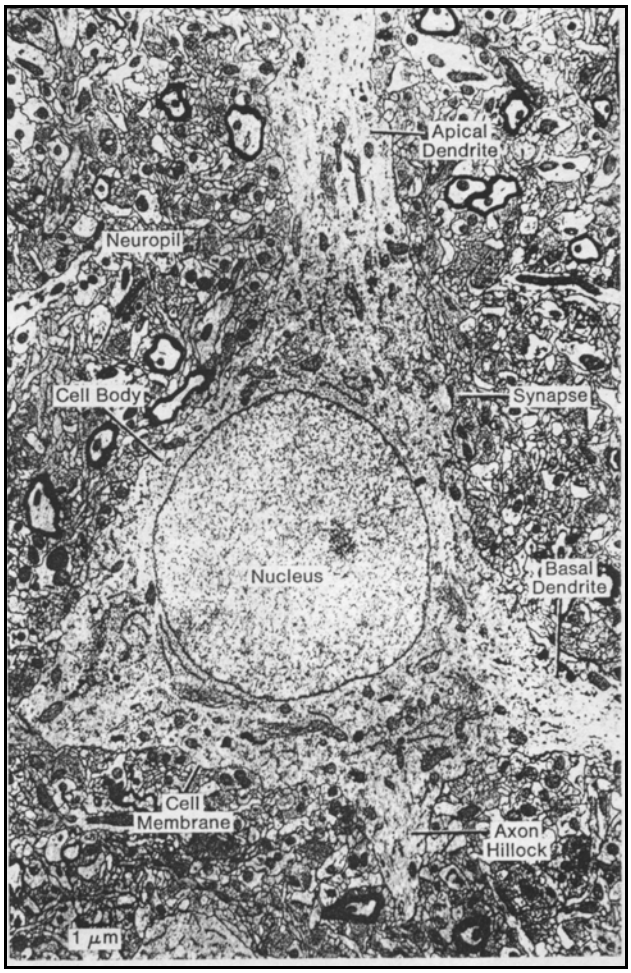

Figure 2.5.2-1 Electron micrograph of a pyramid cell. Note the apical dendrite at the top, the basal dendrite (podite) at lower right and the axon exiting via the hillock at the bottom. In Shepherd, 1988, courtesy of Hersch & Peters.

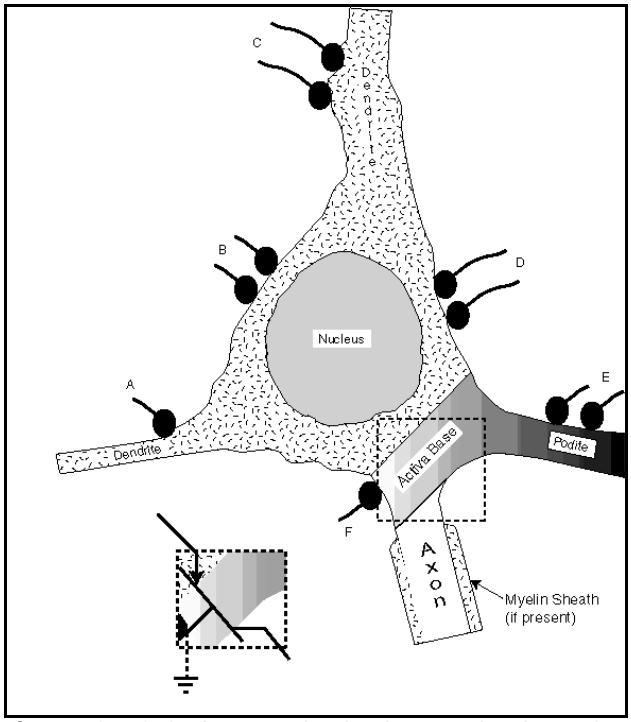

Figure 2.5.2-2 The cytological organization of a pyramid cell. The structure labeled podite corresponds to the basal dendrite of the previous figure. The expanded inset shows the electrical topology of the active base region separating the dendritic structure from the axonal structure in the area of the hillock. A variety of synapses are shown interfacing with this cell. Note the synapses labeled E and F support inverting signal paths.

2.5.2.1.1 The typical input structure of signal differencing neurons

Many terms used in the study of the neuron have a long legacy in morphology. Often, these terms are not well suited to the functional description related to specific classes of neurons. This is a particular problem concerning the various lateral cells found in the signal processing of the retina. **Figure 2.5.2-3** develops the bi-stratified topography of these cells as currently understood.

The differencing mechanism used in neurons appears to be the same in the horizontal, amercine and ganglion cells. The electrophysiology of this mechanism will be addressed in more detail in **Chapters 9** and **13**. The signals are all electrotonic. However, the topography is unique. It consists of two separate neurite arborizations. The dendritic arbor collects the signals to be summed by the cell without polarity inversion. The poditic arbor collects the signals to be subtracted from the signals collected by the dendritic arbor. The detailed topography of these two arbors is determined by the algorithm employed by the particular cell. This algorithm may be aimed at a variety of types of signal manipulation. These include forming the chrominance and polarization signals of the signaling system, performing signal correlation in the POSS and both temporal and spatial diversity encoding.

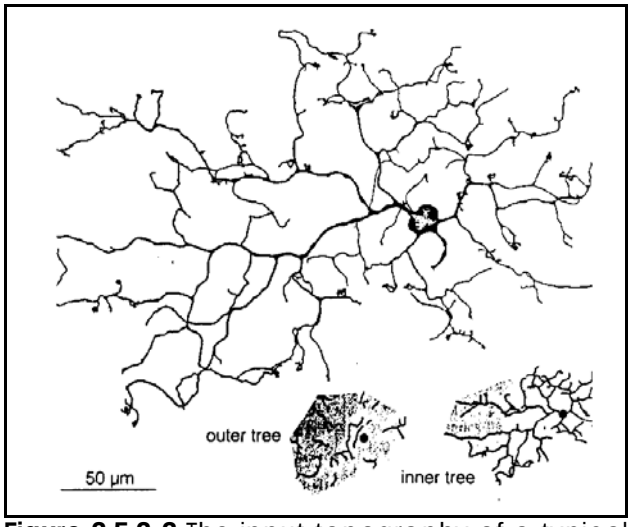

Figure 2.5.2-3 The input topography of a typical differencing (lateral) cell, as typified by the neurites of a small bi-stratified ganglion cell. The cell has two arborizations which ramify in the inner and outer plexiform layers respectively. One arbor is the poditic (inverting) input. The other is the dendritic (non inverting) input. From Dacey & Lee, 1994.

In all of the above applications, the gross topography of the cell looks the same. There may be a small difference in the topography of the soma of the ganglion cells because of the added capacitance required by the circuit.

In the horizontal, amercine cells, the output remains electrotonic. However, in the ganglion cells, the output is phasic as required by their role as the encoders for the signal projection stage of the neural system, stage 3.

The inner dendritic tree (presumably the poditic tree) has sometimes been labeled the pseudo dendrite. It is a distinct morphological and electophysiological element in its own right. It can frequently be identified by its entry into the "side" of the soma. When ramified as here, it collects signals and provides the inverting input to any neuron.

2.5.2.1.2 The electrolytic circuit of the lateral neuron

Figure 2.5.2-4(a) illustrates the basic topological design of the lateral neuron. It is similar to a bipolar cell except the poda region is expanded and includes signal input points. Thus, the podal region has taken on the same cytological and morphological characteristics as the dendritic portion. The cell frequently appears in the literature to have two independent dendritic trees which will be differentiated here by describing them as the dendritic tree and the poditic tree.

The features of the neuron related to the electrostenolytic power supplies are the same as for the bipolar neuron.

Figure 2.5.2-4(b) presents the circuit diagram of a nominal Lateral Signal Processing Cell. Only its poditic compartment is modified from the physical configuration of the Bipolar Cell. The main circuit difference consists of the poditic conduit providing a signal connection on the surface of the podalemma to the base terminal of the Activa. The functional difference is much greater than the physical difference for a number of reasons. Whereas the poda impedance in the bipolar neuron is of negligible value and significance, it plays a significant role in the lateral cell:

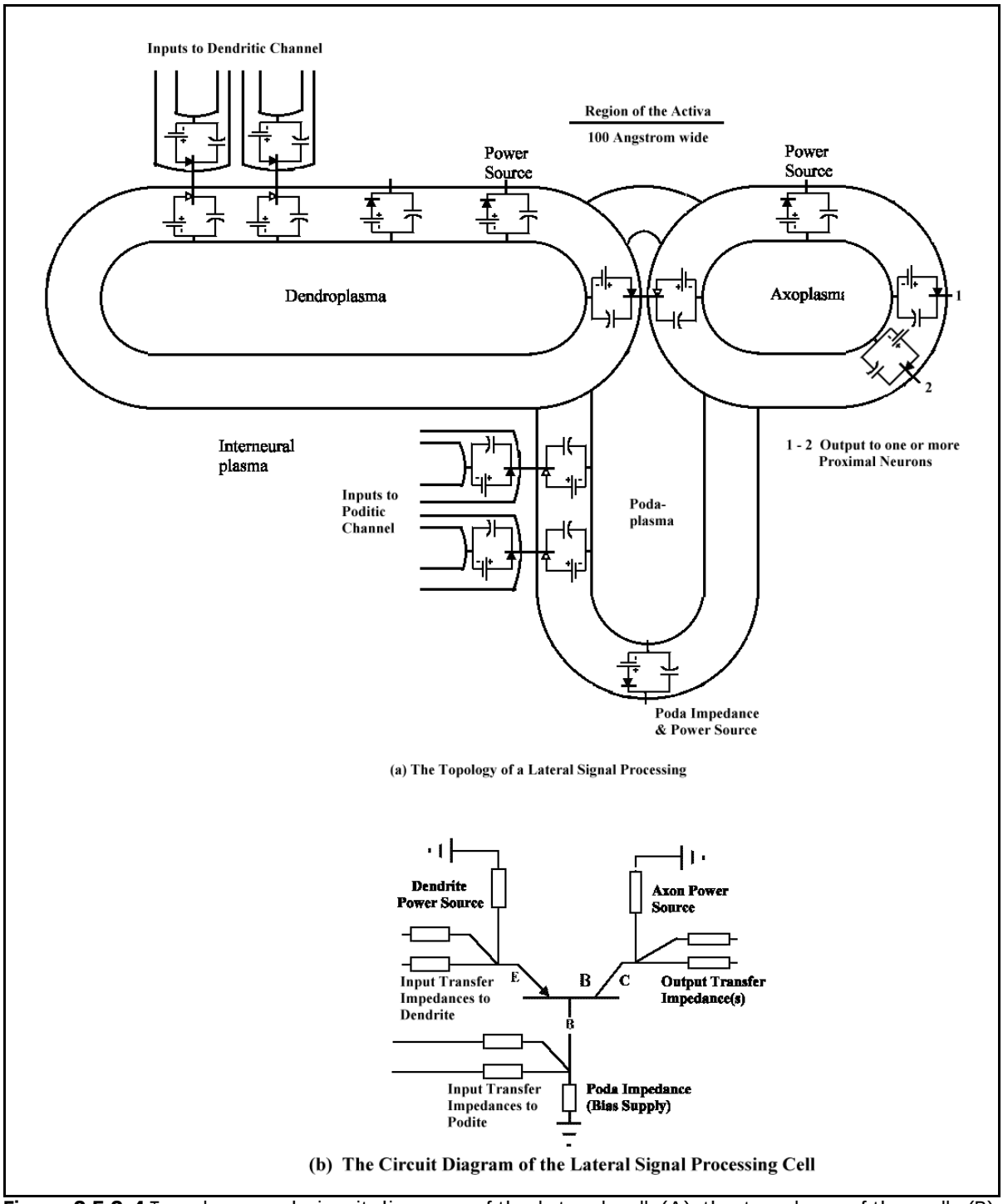

Figure 2.5.2-4 Topology and circuit diagram of the lateral cell. (A); the topology of the cell. (B); the circuit diagram of the lateral signal processing cell.

+ The presence of a significant resistive component in the poda impedance introduces negative feedback into the circuit with respect to any signal applied to the emitter terminal. This

feedback normally introduces a loss in amplification with respect to the input signal at the base terminal over what would otherwise be obtained.

+ The presence of a significant poda impedance allows a signal to be introduced into the base terminal of the Activa. This alternate input signal can be derived from a voltage divider network between the poda impedance and the source impedance of this alternate signal. Although this signal does not suffer from any diminution due to negative feedback, it may be suffer degeneration due to the ratio of the base input impedance and the emitter input source impedance.

+ The signal introduced through the base terminal is in phase opposition to any signal introduced via the emitter terminal, e. g., the net output is the difference between these two input signals.

The overall performance of this circuit is highly dependent upon the impedances found in the various circuit elements, the bias voltages applied and the recognition that the Activas involved are typically operating under large signal conditions.

2.5.2.3 Operation of the lateral neurons

The fundamental role of the lateral neurons is to perform analog subtraction between two input signals. If the neurites of the lateral cells exhibit complex arborizations, the signals due to the multiple connections with preceding cells will be summed within the respective neurite plasma before participating in the signal subtraction of the lateral cells. As discussed above, the precise value of the output potential of the axoplasm is complicated because it involves so many circuit variables. However, within the operating range of the circuit, the output is essentially the algebraic difference between the amplitude of the dendritic signal amplitude and the poditic signal amplitude, each modified by a fixed coefficient. As best determined from the literature, it appears that these coefficients provide equal weighting to the aggregated signals from each neurite

The axoplasm potential represents the difference between the sum of the inputs to each neurite.

The lateral neurons are normally biased to effectuate a nominal quiescent collector current. This results in a quiescent collector (axoplasm) potential that is near the middle of the operating range of the collector. This allows the collector potential to rise or fall depending on the net current through the Activa in response to the differencing process carried out between its emitter and base input circuits.

2.5.3 The sensory neurons of stage 1

The sensory neurons are responsible for the collection of stimuli from the environment and transducing those stimuli into an electrical signal that can be processed further. The sensory neurons explored to date all exhibit a generic circuit topology preceded by a particular receptor mechanism characteristic of the sensory modality. They all exhibit an important feature not found among other analog neurons, the ability to electrolytically amplify an initial low level signal resulting from transduction. They accomplish this be introducing a different conexus configuration employing the Activa defined earlier.

2.5.3.1 The functional properties of the generic stage 1 neuron

Figure 2.5.3-1 shows the development of the sensory neuron from the fundamental neuron of **Section 2.2.5**. To develop this generic neuron type, portions of the reticular lemma enclosing the space normally labeled the reticulum are transformed into type 2 lemma. These areas are brought into juxtaposition with similar areas of type 2 lemma of the dendrolemma. When electrolytically biased, each of these areas forms a conexus containing an Activa of the type defined earlier (frame A). The other features of the neuron remain the same as in the fundamental neuron. Frame B shows one conexus in greater detail (shaded area). It consists of an Activa on the right supported by an additional area of type 2 lemma on the left connected to a receptor. This receptor is responsible for the actual transduction mechanism. This mechanism creates an electrical potential that is passed through the type 2 lemma and

horizontally in the medium between the two lemma where it is applied to the Activa. The current passing through this Activa is passed into the dendroplasm and delivered to the original conexus of the neuron. Frame C shows the schematic for two conexuses delivering current to the original conexus. The key feature of this type conexus is that the input signal is applied to the base terminal of the first Activa (as for the inverting signal in the lateral neuron described in **Section 2.5.2**).

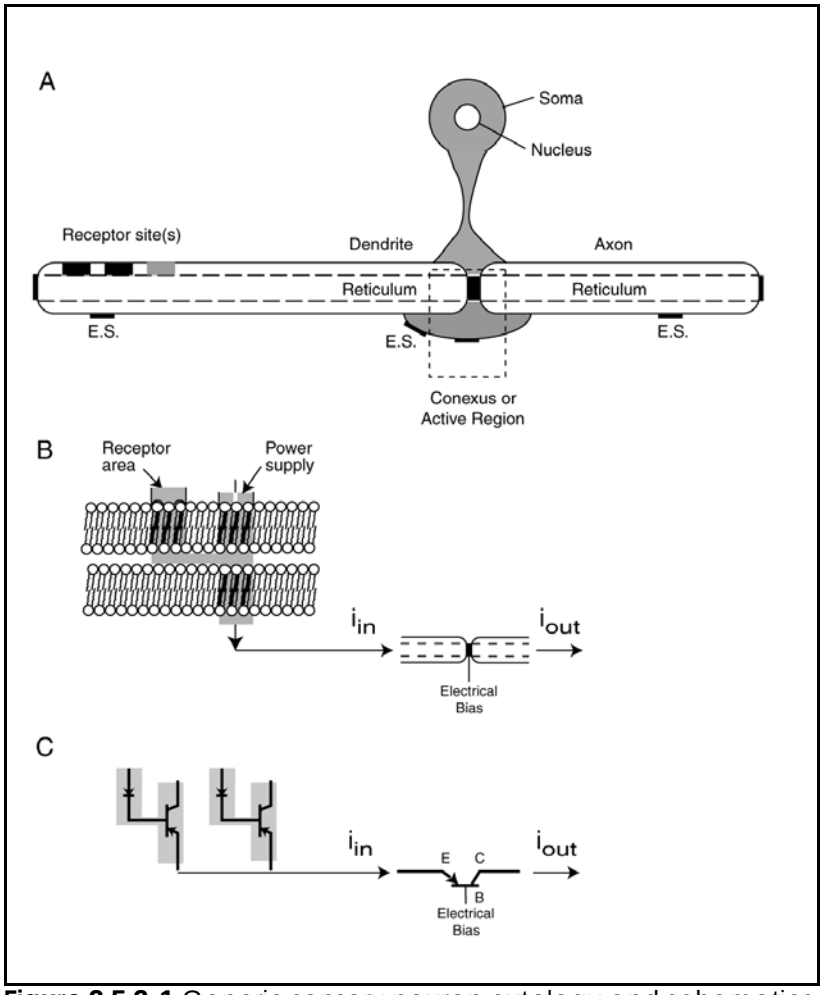

Figure 2.5.3-1 Generic sensory neuron cytology and schematics. A; cytology showing the reticulum and dendrolemma forming multiple receptor sites. E.S.; electrostenolytic supply. B; detail showing the regins of type 2 lemma (shaded) forming an active conexus. All other lemma is type 1. Current through the new conexus feeds into the existing conexus. C; schematic showing multiple new conexuses connected electrically to the existing conexus. See text.

2.5.3.2 The gain mechanism in a sensory neuron

A major feature of transistor action is the deterministic division of current flowing between its terminals. **Section 2.2.2** noted that the current at the axon terminal was typically greater than 98% of the current flowing into the dendritic terminal. The equation is a precise one, and is usually written as;

$I_C = I_{CO} - \alpha \bullet I_E$ and $I_B = (1-\alpha)I_E$

where I_C is the total collector (axon) current, I_{CO} is the collector current absent any emitter current, I_E. and alpha is defined as the fraction of the emitter current that travels across the Activa to the collector. The base current is I_B.

Using Kirchoff's current law for a three terminal device;

$I_B = -(I_C + I_E)$

and combining these two equations leads to an important result;

$I_C = \alpha \bullet I_B/(1-\alpha) + I_{CO}/(1-\alpha)$

In a high quality device, the second term is negligible compared to the first and;

$I_C = \alpha \bullet I_B/(1-\alpha) = \beta \bullet I_B$

Under the assumption of negligible I_{CO}, the emitter current is also very nearly equal to the collector current.

For an alpha of 0.995, beta is 199 and the change in collector current is 199 times the. change in the base current of the Activa. ***This is the source of amplification within the sensory neurons of the neural system.*** Beta is labeled the amplification factor in common emitter connected Activa circuits like those of the sensory neurons. For individual receptors with large capture cross-section or multiple sensory conexuses feeding into one common output conexus, the change in output current at the axon of the second conexus can be considerable.

2.5.3.3 The conventional sensory neuron schematic

Figure 2.5.3-2 shows the electrical circuit of the sensory neuron in conventional electrical terms. It is shown without detailing the input structure associated with the sensory receptor which is modality specific. The potential of multiple conexus circuits to the left is indicated only by the dashed line. The circuit is immediately recognized as the common differential pair found in a profusion of electronics circuits. However, in this application it is an asymmetrical differential pair, a very important specialization. The two Activa are not matched and generally exhibit different operating characteristics. The impedances shown are all complex and generally include both capacitor and diode elements. Impedances Z_{A1} and Z_{A2} also differ. The impedance, Z_{A1}, is of particular importance because it defines the dynamics of the left or first conexus of the differential pair. This impedance causes the effective amplification factor of the circuit to vary from a maximum of beta as a function of time and input current, by varying the average potential applied to the collector terminal of the Activa. This is the most prominent property of this conexus and leads to its labeling as the adaptation amplifier of the differential pair. This adaptability plays a major role in the instantaneous sensitivity of the organism to most stimuli, regardless of the sensory modality. The impedance, Z_{A2}, plays a different role. It is designed to minimize the output impedance of the second conexus insuring the potential, V_{out}, is stable regardless of the number of orthodromic neurons synapsing with the sensory neuron. This conexus is labeled the distribution amplifier of the differential pair. The impedance, Z_P, is designed to control the quiescent axoplasm potential of the distribution amplifier. These two amplifiers, the high amplification factor adaptation amplifier and the unity gain distribution amplifier are found in all stage 1 sensory neurons. While the role of the impedance, Z_D, is important in the sensory neurons of some sensory modalities, that importance will be discussed in **Chapter 8**.

2.5.3.4 The excitation/de-excitation mechanism of sensory neurons–sources

The excitation/de-excitation (E/D) mechanism has been studied in detail for the visual, auditory, taste and smell modalities and is believed to be common to all sensory modalities. For the complete derivation of the excitation/de-excitation equation applicable to stage 1 sensory neurons, see Section 7.2 of "Processes in Biological Vision[92]" for the visual modality, where the expression photoexcitation/de-excitation is used in place of E/D. For the auditory modality, see Section 5.4 of "Processes in Biological Hearing[93]." For the gustatory modality (taste), see Section 8.5 in "Processes in Biological Taste[94]." Similarly, for the olfactory modality (smell), see Section 8.6 in Processes in Biological Smell[95]."

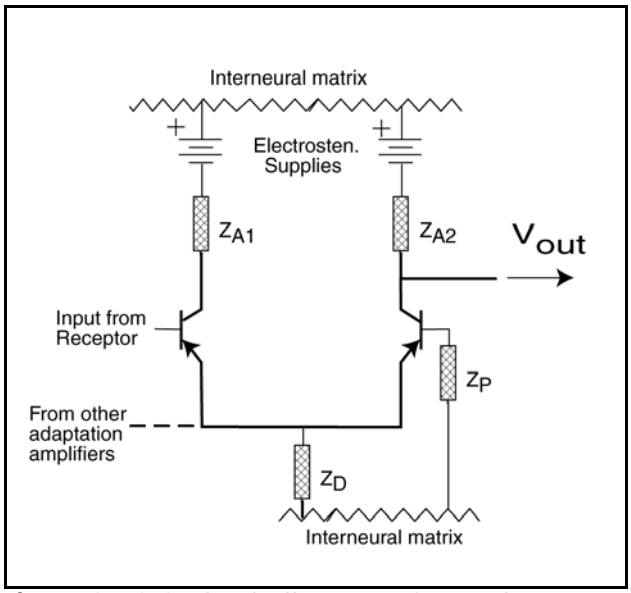

Figure 2.5.3-2 Circuit diagram of generic sensory neuron. The left conexus can be replicated as suggested by the dashed line, or considered an equivalent conexus representing the sum of these circuits. The interneural matrix provides a common "ground" for all sensory neurons. See text.

2.5.3.5 The E/D mechanism of sensory neurons–general case

The solution of this equation is the Complete Excitation/De-excitation (E/D) Equation given by;

$$i(F,t,j,\sigma,\tau) := \frac{\sigma\cdot F\cdot\tau}{(1-\sigma\cdot F\cdot\tau)}\cdot e^{j\cdot K_T\cdot\left(\frac{1}{F}\right)^{\frac{1}{6}}}\cdot\left[e^{-\sigma\cdot F\cdot t\cdot K_T} - e^{K_T\cdot\left(\frac{-t}{\tau}\right)}\right]$$

Figure 2.5.3-3 The complete impulse solution to the E/D Equation for for the transduction process in any sensory receptor for $\sigma\cdot F\cdot\tau \neq 1.000$

In the complete impulse solution to the P/D Equation for $\sigma\cdot\mathbf{F}\cdot\tau \neq 1.000$, i is the current generated

[92]Fulton, J. (2004) http://neuronresearch.net/vision/pdf/7Dynamics.pdf#page=29 Section 7.2

[93]Fulton, J. (2008) http://neuronresearch.net/hearing/pdf/5Generation.pdf#page=40 Section 5.4

[94]Fulton, J. (2012) http://neuronresearch.net/neuron/pdf/8SignalGenerationPt1.pdf Section 8.5

[95]Fulton, J. (2012) http://neuronresearch.net/neuronpdf/8SignalGenerationPt2.pdf Section 8.6

by the piezoelectric process within the cilium, F is the applied stress, σ is the quiescent sensitivity coefficient, τ is the time constant of the net cross link replacement process, t is time, j is the imaginary vector, and $K_T = 102 \cdot e^{(-T/8)}$.

This equation has been found to apply to any sensory neuron involving a quantum-mechanical mechanism. All biological sensory modalities involve such a mechanism (where the process of breading a chemical bond constitutes a quantum-mechanical process.

The ratio of the terms prior to the first exponential is defined as the scale factor of the equation.

The first exponential term contains the imaginary operator, j. It is a pure delay that is intrinsic to the transduction process ahead of the first amplifier circuit of the sensory neuron. It arises between the initial stimulation and the initial response of the piezoelectric mechanism. This term has not been accounted for in most hearing data. It is common to show the relative response starting simultaneously with the stimulus because of the frequent unmeasured delays associated with the distance between the point of stimulation and the point of measurement.

The values of 102 and 8 in the expression for K_T were derived from the visual responses of a variety of exothermic animals. It is related to the range of temperature compatible with life. This range is roughly zero to 40 C. Little equivalent data is available for hearing. Corey & Hudspeth have presented limited data for the saccules of the bullfrog that might suggest different values for the mechanoreceptors[96]. Their data is based on step-response instead of impulse-response experiments. Further experiment is required in this area.

The product of $\sigma \cdot \mathbf{F} \cdot \tau$ is critically important in this equation. It causes the time constant in the first exponential within the brackets to be a function of the applied stimulus and the state of the polymer bundle. It also causes the overall coefficient to be a complicated function of the stimulus and the state of the polymer bundle. For the condition, $\sigma \cdot \mathbf{F} \cdot \tau = 1.000$, the solution to the differential equation is quite different. It is given in a following section.

The term in brackets in the above equation has recently been called a double Boltzmann function in the hearing literature because of the two exponential terms that they look upon as simple time constants. They associate the honorarium Boltzmann with a simple exponential decay function with time as the primary argument. However, the function is more complex than those writers anticipated. The first term is a function of several variables that can change the total response significantly. Both terms are a function of temperature. The difference between these two terms forms the apparent decay function in the P/D Equation. This difference cannot be approximated by a simple exponential function.

Figure 2.5.3-4 illustrates the complete impulse solution to the P/D Equation using two different abscissas. Both frames assume a decay time constant of 12.5 ms. The products of $\sigma \cdot F$ are given in reciprocal seconds. The upper frame shows the shapes of the responses in greater detail. The lower frame shows the intrinsic delays associated with each response more clearly. The response at the Hodgkin condition is shown by the dashed line in both figures (See next paragraph).

---

[96]Corey, D. & Hudspeth, A. (1983) Kinetics of the receptor current in bullfrog saccular hair cells *J Neurosci* vol 3(5), pp 962-976

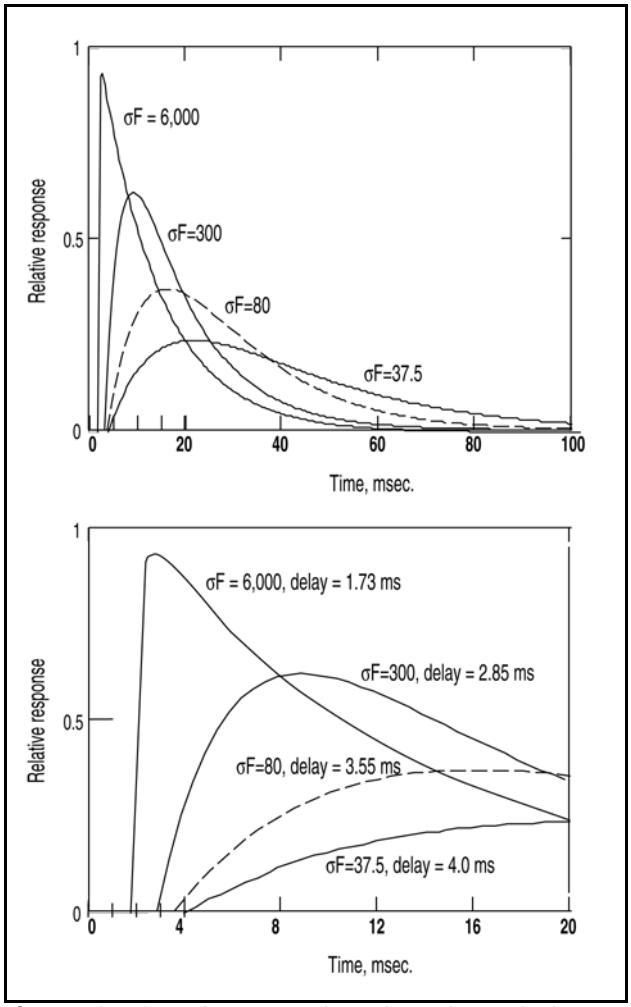

Figure 2.5.3-4 The complete impulse solution to the P/D Equation SMOOTH & REDRAW HIRES presented at two different scales. Both frames show the complete solutions, including the intrinsic time delays. The decay time constant is 12.5 ms. No noise or band limiting is present. All curves depart from the baseline as first order responses. The dashed line is the degenerate or Hodgkin Condition, $\sigma \cdot F \cdot \tau = 1.00$. The curves are drawn for 37 Celsius and $K_F = 30$. The time to peak response is clearly the sum of the intrinsic delay plus the rise time.

2.5.3.6 The E/D mechanism of sensory neurons–Hodgkin Condition

The P/D Equation exhibits a discontinuity at $\sigma \cdot \mathbf{F} \cdot \tau = 1.000$. However, it is mathematically well behaved. Thus, the function can be evaluated at this point by taking its derivative. The resulting equation is considerably simpler. It is Poisson's Equation of the second order. This is the equation used (but not derived) by Hodgkin in the 1960's in an attempt to describe the responses of the photoreceptors of the turtle.

For $\sigma \cdot \mathbf{F} \cdot \tau = 1.00$, L'Hospital's Rule must be applied to solve the overall differential equation of the E/D Process. Interestingly, the solution is simpler and only involves one exponential in the amplitude term. The absolute delay term is also simpler and the scale factor disappears.

The following equation represents the complete solution at the singularity.

$$i(F,t,\tau) := e^{j \cdot K_T \cdot k_d \cdot \left(\frac{1}{F}\right)^{\frac{1}{6}}} \cdot \frac{t}{K_T \cdot \tau} \cdot e^{-\left(\frac{t}{K_T \cdot \tau}\right)} \qquad \text{Eq. 2.5.3-2}$$

where τ is the same intrinsic time constant of the de-excitation process found in the complete equation. K_T remains the thermal coefficient modifying that time constant as a function of temperature. The imaginary term, describing the physiological latency of the circuit, remains well behaved and the amplitude term is recognizable as the equation of Poisson's Distribution of the second kind. The only variable is the time, t. The peak amplitude of the response always occurs at the same time following the appropriate delay.

> The general E/D equation can be reduced to the Hodgkin Condition and then be further reduced to the so-called alpha function, used in the software program known as NEURON described by Carnevale & Hines[97], by eliminating temperature (by setting $K_T = 1.000$) and setting the delay term to 1.000 (equivalent to their limiting t to $t \geq t_{act}$).

Hodgkin first proposed the real part of this mathematical form as the general solution to the E/D Process in 1964. However, he could not fit this equation to most of the data without adopting a piecewise approach. As shown above, the Poisson Distribution is a special case of the general solution. This special case, for $\sigma \bullet F \bullet \tau$ equal to 1.00, has been previously labeled the Hodgkin Condition by this author.

A set of templates can be prepared for the Hodgkin Condition and different time constants. After overlaying the templates on the experimental data, the curve best fitting the Hodgkin Condition is easily identified. Finding the time constants and other factors in the general solution describing other responses is then straightforward.

2.5.3.7 The E/D mechanism in parametric stimulation

The general E/D mechanism and equation appear to describe the typical operation of all neurons (except those described separately for the visceral neurons) under parametric stimulation with the possible exception of some of the delay parameters. The general shape of the predicted E/D response appears to fit the reported data for the nominal neuron found in the literature quite well.

2.6 The pulse (phasic) and hybrid signaling neurons

---

[97]Carnevale, N. & Hines, M. (2006) The NEURON Book. NY: Cambridge Univ Press page 4

In the past, the conventional wisdom was that the axon of most neurons consisted of a continuous core with the signal propagated along the axon in a continuously decaying manner similar to an electrical cable. The purpose of the Nodes of Ranvier was essentially unknown and the purpose of the myelin sheath was usually related in vague language to the insulation surrounding an electrical cable. More recently, it has been recognized that the signal along an axon is regenerated at each Node (with the mode of signal transmission described as salutatory) and that the axon actually consists of semi-independent regions connected at the nodes; in the fashion of a string of sausages.

As noted earlier, neurons are capable of acting as monostable or astable oscillators if positive internal feedback is present. This capability is exploited within the stage 3 circuits of the neural system.

The pulse and hybrid neurons of stage 3 are concerned with the transmission (projection, not conduction) of neural signals over distances too great to be accomplished effectively by analog signaling. This class of "projection neurons" are used throughout the neural system. They are found in afferent signal paths between the stage 2 of the sensory modalities and the mid-brain, between the mid-brain and the cortex, within the cortex, and between major engines of the efferent neural system. When these signal paths contain multiple neurons in parallel, they are known morphologically as commissure within the CNS and as nerves outside of the CNS.

This section will address the functional types of neurons found within stage 3 projection neurons,

1. the ganglion neuron that accepts an analog signal waveform and creates a pulse stream encoding the information associated with that analog waveform.

2. the stellite neuron that accepts a stream of one or more action potentials, decodes the pulse stream and generates a replica of the original analog signal waveform.

To achieve transmission of the information over distances greater than two millimeters, the ganglion neuron incorporates two unique features.

1. It incorporates a myelin sheath surrounding its extended length axon that fundamentally changes the character of the signal projected by the neuron.

2. It incorporates a mechanism for regenerating the amplitude of the action potentials without degrading the encoded pulses (the Node of Ranvier).

Each of these elements will be introduced here but be addressed in detail in **Chapter 9**. The Node of Ranvier will be addressed here for completeness. It is functionally a modified electrolytic synapse.

A discussion of the difference between stage 3 action potentials and other pseudo-action potentials will begin this section.

2.6.1 The Action Potential vs pseudo action potentials EDIT

As the neurosciences grew, it was common for investigators to describe any measured waveform recorded from a neuron as an "action potential," sometimes including waveforms that are inherently foreign to the *in-vivo* system but generated by the test set. It is important to separate the waveforms of essentially fixed pulse width, generated by stage 3 neurons, from waveforms that exist for indefinite durations, frequently controlled by the duration of a stimulating source. The narrow monopulse pulses with a pulse width of less than two milliseconds, and well known thermal characteristics, will be described as action potentials in this work. They are predominantly found among the mammals. These pulses appear in very complex pulse trains and individually are not subject to change in characteristics except as a function of temperature. Action potentials are very similar across mammalian species.

Other waveforms of variable width, and primarily analog in character, are explicitly defined as not action potentials, but may be called pseudo-action potentials. The neural system exhibits

three distinct signaling waveforms. It also exhibits two analog waveforms related to the cardiac system that are similar to action potentials and will be described as pseudo-action potentials.

Analog Signaling Waveforms

> Stage 1 sensory neurons create an analog signal in response to stimulation that lasts as long as the stimulation. It is generally described as a "*generator waveform*." Its precise form is dictated by the Excitation/De-excitation Equation of the first amplifier of the sensory neuron, the adaptation amplifier.
>
> Stage 2 signal processing neurons typically perform summing and differencing operations on generator waveforms to create an analog "*signal waveform*."
>
> Stage 4, 5 & 6 neurons process analog *signal waveforms* generally received from stage 3 decoding neurons.

Phasic Signaling Waveforms

> Stage 3 encoding neurons (typically ganglion neurons) create the *action potentials* of the neural system. As noted, these pulses have very characteristic pulse widths and occur in complex pulse trains encoding analog information.

Analog Non-signaling Outputs

> Stage 7 neurons are neuroaffectors and hybrids. They are similar to stage 3 stellite neurons in that they accept action potential pulse streams which they decode to produce an analog output. However, their output are chemical, and include the hormones.

Analog Combined Signaling & Stimulation Waveforms

> Stage 8 neurons are unique to the visceral system. They produce *pseudo-action potentials* that will be described in **Section 2.7.4**. They are described as *cardiocyte waveforms/potentials* in this work. The width of these waveforms varies with the rate and shape of the stimulating waveform.

This work will use the term action potential only to describe narrow monopulse waveforms (less than two milliseconds width in mammals at biological temperature) generated within the stage 3 (signal projection) portion of the neural system.

Research into biological vision has provided a clear picture of the various applications of circuits employing action potentials. It is necessary to define this phenomenon more precisely at this time. The concept of an action potential arose from the observation that the axon of many easily accessed neurons exhibited a uniquely shaped pulse output. While these pulses frequently occurred in groups, the structure of the groupings were difficult to interpret.

2.6.1.1 The nominal action potential

The action potential found in *Chordata* has been extensively investigated. It is found to be the fundamental information carrying medium of stage 3, the signal propagation stage of neural signaling. In this role, action potentials are found being generated by morphologically identified ganglion and most pyramid cells. The reason for the introduction of these cells is to provide a more energy efficient method of signal transmission over long distances. These cells are introduced wherever it is necessary to transmit information more than about two millimeters within the organism. The individual action potential contains very little information. However, receipt of a single action potential via an intensity type signaling channel does signal the occurrence of some significant event that is frequently used in the Alarm Mode of stage 4 CNS operations (**Chapter 15**).

Groups of action potentials are employed to represent both monopolar (intensity) information and bipolar (intensity difference) information. Such groups are used to transmit information between analog signal processing engines of the peripheral sensory and skeleto-muscular

systems, and the central nervous system (the hallmark of a chordate). The action potentials associated with the ganglion cells in *Chordata* occur in two similar but distinct forms. The first is the form generated within the hillock of the ganglion cell. The second is that generated within the Nodes of Ranvier along the length of the ganglion axon (at about 2 mm intervals). **Figure 2.6.1-1** shows a close approximation of this second form[98]. Schwarz & Eikhof provided parametrically excited axoplasm potentials for the rat (shown using smooth lines). In a separate paper, the Schwarz team showed similar data (figure 2A(a) for the parametrically stimulated *in-vitro* Node of Ranvier of a human (shown by jagged line in the figure)[99].

> Parametric excitation means the biological circuit was excited by abnormal means. The axoplasm was stimulated by direct current injection. The emitter to base potential was only affected indirectly through capacitive coupling. No direct stimulation of the dendrite (emitter) was employed and neither the dendroplasm potential nor the emitter to base potential was measured. The significant delays between their stimulation and the leading edge of the monopulse reflects the time required to raise the emitter from its quiescent potential to its threshold value, where the feedback factor exceeded 1.0.

Features to note are the distinctly different slopes of the rising and falling edges of the main waveform. The leading edge is essentially a straight line at this scale (although it is in fact an exponential waveform). The significant difference in slope between the ascending and descending portions of a monopulse oscillation waveform is diagnostic for relaxation oscillators based on a common-base Activa within the neuron. The difference between the slopes of the rising and falling edges of the pulse also suggest a switching action at the peak of the waveform (a second diagnostic characteristic of relaxation oscillators based on a common-base Activa). Note also the significant delay between the peak of the output waveform and the peak near threshold attributed to the parametric stimulus (dashed vertical lines). Transition to pulse formation occurred at an axoplasm potential of 18.5 mV above quiescence in these waveforms. Schwarz & Eikhof did not provide data point on their original graphs and only a few neural specimens were documented.

While their human data in figure 2A(a), measured at 25 degrees Centigrade, shows a high degree of similarity to the rat action potential measured at 20 degrees C, both curves differ significantly from the curve for 37C.

The modeling by the Schwarz team at 20C using numerical integration of a set of Hodgkin & Huxley equations required several adjustments from the accepted values in the 1980's and 1990's. They also encountered “rundown” using a Ringer’s solution. The rundown was probably due to a lack of glutamic acid in the solution. Note the extended duration of the recharging period in the figure. Such long recharging intervals significantly affect the refractory period of the neuron and subsequently limit its maximum firing rate.

> Whenever, the temperature of the experiments and subsequent modeling activities related to mammals are carried out at non-endothermic temperatures, the resultant figures and tabulations must indicate the specific temperature to which they apply ***or*** be labeled *pseudo*-action potentials. *Pseudo*-action potentials cannot be used to reliably represent the physiological situation in endothermic animals (**Section 2.6.1.2.3**).

Schwarz et al used 20C as the standard temperature for their numerical solution to the H & H equations; that temperature clearly leads to *pseudo*-action potentials. They offered that their equations could be modified using different values of Q_{10} from a table and references supplied. However such usage rests on the assumption that the discharging and recharging portions of the action potential are affected by temperature equally. This assertion appears doubtful from their waveforms and is false based on the analytical solution to the action potentials provided

---

[98]Schwarz, J. & Eikhof, G. (1987) Na currents and action potentials in rat myelinated nerve fibres at 20 and 37 C. Pflugers Archive--European Journal of Physiology. vol. 409, pp. 569-577

[99]Schwarz, J. Reid, G. & Bostock, H. (1995) Potentials and membrane currents in the human node of Ranvier *Eur J Physiol* vol 430, pp 283-292

by the Electrolytic Theory of the Neuron. As seen from the figure, the overall waveform involves three sectors, the pre-threshold, discharging and recharging sectors. The time constant of the discharging (leading edge) portion of the waveform is determined by the saturation resistance of the Activa collector-base circuit and is minimally temperature dependent. The recharging (trailing edge) portion is determined by the impedance of the current supply recharging the collector capacitance and is quite sensitive to temperature.

The initial linear ramp of the axoplasm potential (for the human NoR) during the prethreshold sector was in response to the integration of the fixed stimulus current flowing through the patch clamp (0.5 ms duration) onto the axoplasm capacitance formed by the myelinated axolemma.

As usual, the designation of the currents in the Schwarz papers employed the typical chemical euphemisms and the continuity assumption regarding the actual currents involved (no switching type monopulse oscillator was recognized although their equations employed binary switching functions).

Ramachandran used the same 2 mm interval as the maximum length of an axon segment between two Nodes of Ranvier in 2002 although he did not recognize the detailed character of the node in his conceptual Node of Ranvier[100].

Action potentials are necessarily limited in pulse width in order to satisfy the sampling requirements of information theory. These pulses are fixed in amplitude and in pulse width. The information contained in the analog waveforms is now represented by the time interval between the pulses. In the biological system, the action potential pulses are not binary; they are mono-stable. Their only stable state is at the quiescent voltage in the absence of any analog stimulation.

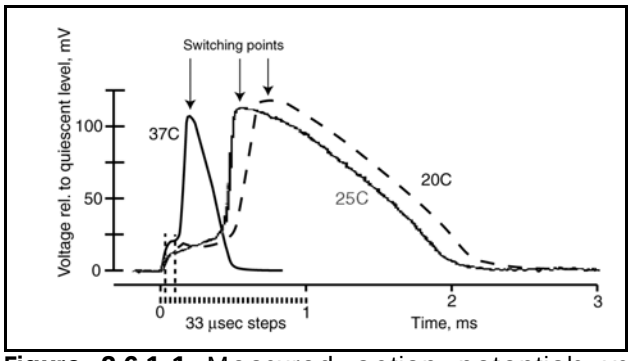

Figure 2.6.1-1 Measured action potentials vs temperature for rat & human motor neurons. The technique used the patch clamp technique and the waveforms are therefore parametric in character. Smooth curves from the rat. The 37C response was elicited by a 30 µsec current pulse. The 20C response was elicited by a 100 µsec pulse. Rough curve, actual recording of a stimulated action potential *in-vitro* at 25C from human. Stimulus was 0.5 ms pulse. See text. Assembled from Schwarz & Eikhof, 1987 & Schwarz et al., 1995

The set of continuous (unsolved) differential equations of Hodgkin & Huxley and their followers are not compatible with a switching phenomenon within the duration of the action potential waveform. To avoid this problem, Hodgkin & Huxley select the applicable differential equation using the auxiliary parameters labeled, h, m & n (page 518) and then speak conceptually of early currents, late currents etc. These parameters are in fact binary switching functions controlling the applicability of a given equation as a function of time. Schwarz et al. continued to use h, m and n to vary the values of α and β at arbitrary times corresponding to the times at which threshold was reached and the identified switching points. these are the same switching points employed within the Electrolytic Theory of Neuron operation.

Schwarz and colleagues continued to employ the binary switching parameters, h, m & n in their numerical integration in order to achieve continuous waveforms that fit the observed data to an arbitrary degree of accuracy based on fundamentally conceptual initial equations. As the quality of the recorded data has improved, it has become more and more difficult to use numerical integration to achieve such matches. The discussions of Schwarz and colleagues reflect this fact with their frequent use of presumptive, as opposed to explicit, expressions about the actual currents present. By changing to an electrolytic model, the equations are all

[100]Ramachandran, V. (2002) Encyclopedia of the Human Brain. San Diegeo, CA: Academic Press

deterministic and easily integratable in closed form when required. No approximation techniques, such as numerical integration, are required.

Figure 2.6.1-2. provides additional detail relating to the astable, or free-running action potential generator, and the driven action potential generator. The left frame shows an action potential departing from the transition value abruptly and proceeding to follow a nearly straight line ramp until approaching saturation (3) at –20 mV. The feedback gain drops abruptly at this point. As a result, input and output circuits become isolated. The axoplasm potential begins to repolarize along a nominally exponential curve leading to point (5) as the power supply recharges the axolemma capacitance. Simultaneously, the emitter to base potential, which has been driven negative by the feedback voltage across the poda impedance, begins to increase exponentially from its power source(s) and impedances. Its target potential is a positive steady-state value. When this potential becomes sufficiently positive for the Activa to begin conduction and the feedback gain to become positive (2), the circuit again goes into monopulse oscillation and the axoplasm potential again departs the transition value abruptly.

The right frame shows the driven-oscillator case. The target voltage of the emitter to base potential, based on its bias supply, is below the threshold value where the Activa feedback factor reaches a value of 1.0. The circuit will not oscillate. However, if an external stimulant causes the emitter to base potential to rise above the threshold value only momentarily, the necessary feedback factor of 1.0 is attained and the circuit will proceed to generate an action potential as in the above scenario. While the emitter to base potential is positive but below the threshold level, the Activa will act as a class A amplifier. The axoplasm potential will track the emitter to base potential in the region between the cutoff potential, V_{cut}, and the transition potential, V_{trans}, resulting in the small rise in the axoplasm potential before the main ramp begins.

An auxiliary graph is shown of the potential at a distant point on an extended length dendrite to illustrate a point. It is possible to have a significant delay between stimulation of the dendrite and the beginning of the axoplasm response due to the low signal transmission velocity along a dendritic tree.

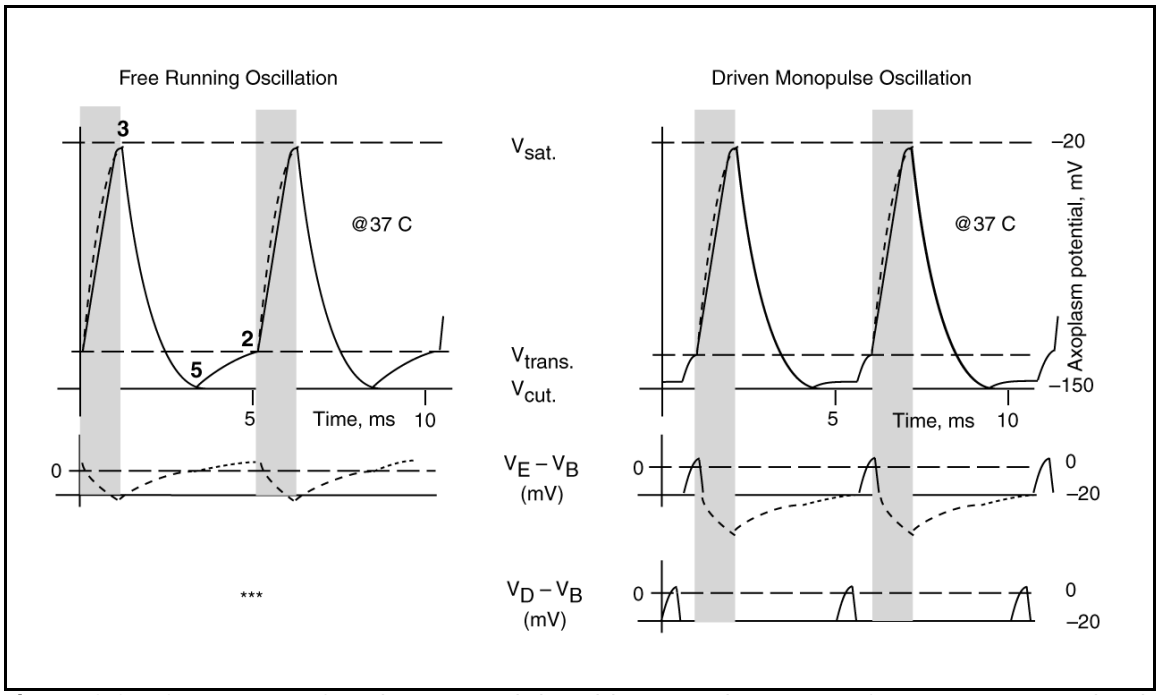

Figure 2.6.1-2 Features of action potentials. Rising axoplasm waveforms assume Activa is acting as a current source charging the axolemma capacitance. Dashed line in upper waveforms shows the usually unmeasurable effect of the electrostenolytic supply opposing the current source. Left; the target bias of the emitter to base potential is positive. The circuit will generate a monopulse every time the emitter to base potential goes positive. Right; the target bias of the emitter to base potential is negative. The circuit will not generate a monopulse until an external stimulation raises this potential into the positive region. See text for detailed discussion.

Since the shape and duration of the action potential is determined by the circuit elements, its shape is not subject to significant change due to changes in the stimulation pulse interval (as it specifically is in the cardiac system waveforms, **Section 2.6.1.2.3**).

- - - -

The figure shows the features of the chordate action potential gleaned from the literature and interpreted using the theory of this work. As indicated, these action potentials occur under two different conditions. They may be generated continuously in the absence of stimulation, or they may be generated individually in response to stimulation. The two waveforms show a slight difference near the beginning of the output pulse. Several critical voltage levels are associated with the operation of both oscillator circuits.

In the absence of instrumentation problems, neither the free-running or the driven oscillators associated with stage 3 signal projection neurons exhibit any over or undershoot under the formal definition of the term. The observed signal waveforms, actin potentials, do not extend outside the maximum and minimum potentials established by the power supply circuits.

2.6.1.1.1 The refractory period of a relaxation oscillator

The term refractory period is frequently introduced into introductory neuroscience texts with limited definition. It is obvious from the above figure, the so-called refractory period of a ganglion cell is not a real or fixed parameter. It is fundamentally, the interval between event 3 and event 2 in that figure. During this period, the emitter to base potential is more negative than the threshold potential. To force the neuron into oscillation during this period, a larger stimulus than normal will be required. The required amplitude of this stimulus during the refractory period is given by the difference between the instantaneous emitter to base potential and the threshold potential. This amplitude is clearly a variable that can be measured during parametric stimulation of the neuron.

2.6.1.2 The *pseudo*-action potentials

The true biological action potential only exhibits the waveform components shown in the previous figure. It has a very fast exponentially rising edge that is nominally presented as straight in most graphics. It exhibits switching at the peak of the waveform. Its width is independent of the stimulus repetition rate. And, it is less than one millisecond wide at 37C. The refractory period following the switching that occurs at the peak is relatively short– on the order of 1/4 millisecond–and leads to a maximum pulse rate on the order of 500-600 pulses per second in most mammalian situations.

A pulse believed to be similar to an action potential had been observed in several cephalopods of the Order Mollusca. Based on this observation, Hodgkin & Huxley investigated the source of the assumed action potential associated with the giant axon of the squid *Loligo*. Following their work, Mueller & Rudin attempted to fabricate synthetic bilayer membranes exhibiting the same properties as those described for the axolemma of Loligo.

There is considerable difference between the *in-vivo* chordate action potentials and the *in-vitro* waveforms measured and interpreted by Hodgkin & Huxley, Mueller & Rudin and others, generally from non-chordates.

2.6.1.2.1 The *pseudo*–action potentials of Hodgkin & Huxley

Hodgkin & Huxley obtained a relatively large neuron from a neural engine of a mollusc, *Loligo,* believed to control the operation of a large group of muscles involved in swimming (in general, locomotion). They removed the associated neurons packed closely around the large neuron (and apparently acting as an alternative to myelination in *Chordata)*. They then removed all neurite tissue from the neuron to pacify its operation. "Careful cleaning was important since the guard system did not operate satisfactorily if the axon was left with small nerve fibres attached to it." They then cut off the region of the nominal axolemma pedicle, removed the axoplasm and inserted a long cannula into the cylindrical axolemma. The resulting configuration exhibited little similarity to a functional neuron. Specifically, the electrical properties of the long cannula were inconsistent with the propagation of electrical signals along the axolemma. They proceeded to parametrically stimulate the axolemma by applying a depolarizing pulse voltage between the cannula and the external fluid bath using the voltage clamp technique (not patch clamp technique).

They recorded a wide range of electrical waveforms that do not resemble what are currently considered action potentials of stage 3 in *Chordata*, **Figure 2.6.1-3** (their Fig. 8, 1952, pg 433). In some cases, the peak voltage amplitude of the stimulus exceeded the peak amplitude of the putative action potential. In many cases, the waveform hyperpolarized for an interval after the stimulus and before depolarizing to form the response. Hodgkin repeatedly attempted to fit these curves to a Poisson Equation. However, he had to adjust the parameters of the Poisson Equation as he varied the intensity of the stimulation pulse.

Interpretation of the waveforms recorded by Hodgkin & Huxley were limited by the instrumentation of their day. These limitations included the use of an excessively bright trace on their oscilloscope that obscured the change in the waveform near its peak, the poor compensation for the stray capacitance introduced by their test probe and the limited stability of oscilloscopes when used in the DC mode (when available).

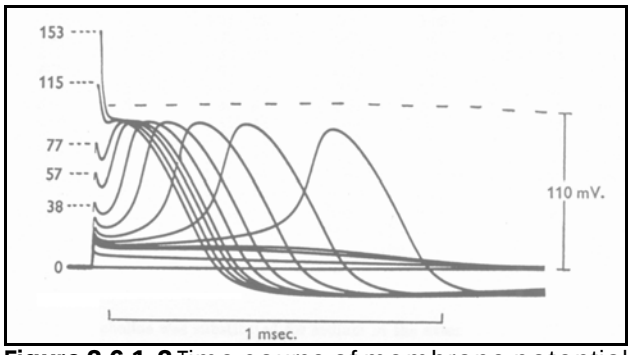

Figure 2.6.1-3 Time course of membrane potential following a short parametric shock at 23C. Current pulse was nominally eight microseconds duration. Labels on left represent shock energy in milli-micro-coulombs/cm^2. From Hodgkin, Huxley & Katz, 1952.

The Hodgkin & Huxley waveforms are clearly pseudo-action potentials at best. They appear to represent the impulse response of his combined test article (the passive axolemma of a mutilated neuron of the squid) and test set to parametric stimulation *in-vitro*.

2.6.1.2.2 The *pseudo*–action potentials of Mueller & Rudin

Mueller & Rudin, working in the 1960's, used the generic term action potential to describe virtually any pulse response, whether driven or not and whether related to the nervous system or not. They were working to emulate a biological membrane through reconstitution from recovered biological material or synthesis from stock materials. They studied the effect of a wide variety of chemical agents, particularly on their synthetic membranes. These membranes were generally symmetrical bilayers of single phospholipids available at the time. The chemical agents centered on Alamithicin and protamine, two relatively small protein *families*. They did not specify the precise molecular formulas for these materials, although alamethicin does contain a carboxyl group. They used the simple Leyden Jar test configuration.

Although they studied their materials from the perspective of exploratory research oriented organic chemists, it appears they could have simplified their work by looking at the previous work of manufacturing semiconductor metallurgists (chemists). While they discuss their data from many perspectives, they did not recognize that many of the membranes they created exhibited the quantum-mechanical tunneling effect well documented in the manufacture of semiconductor based tunnel diodes. Their current-voltage data shows the classical form of the tunnel diode, including the unique triple stability feature of the resulting output signals. **Figure 2.6.1-4** shows one of their measured characteristics with a conventional load line of electronic circuit theory added. The curve drawn through the x's represents their membrane before it was doped with protamine. The membrane appears to have been an insulator below the breakdown potential of about +70 mV. The curve drawn through the o's is the result of doping. The effect of doping level is shown in their Fig 1 of their paper in Nature[101]. The negative peak in the doped membrane response is quite variable in position when using their preparation technique. However, this sample from that figure is illustrative. They reported on this or a similar membrane in a contemporaneous article[102]. They describe their test configuration in the second paper. They also describe the transient response of their membranes, and most notably the three stable points in their waveforms. These points are clearly shown in the figure as intersections with the load line. The figure shows two load lines to illustrate the sensitivity of the results to this parameter. The 3 x 10^4 Ohm-cm^2 load line is optimized for this membrane. It provides near maximum dynamic range along both the voltage and current axes while maintaining the three stable points noted by Mueller & Rudin. Also shown is a higher impedance load line. This load line of 3 x 10^7 Ohms is still one order of magnitude lower than the load line

[101]Mueller, P. & Rudin, D. (1968) Op. Cit. *Nature* vol. 217, pg 714

[102]Mueller, P. & Rudin, D. (1968) Op. Cit. *J Theor Biol* vol. 18, pg 237

of 2 x 10^8 used by Mueller & Rudin. Their load line is nearly parallel to the horizontal axis and difficult to see in this figure. While this load line maximizes the voltage differences in the waveforms, it reduces the stability of those waveforms. The nominal negative resistance, R_M, of their doped membrane was –3,250 Ohms (–32.5 Ohm-cm^2)

While Mueller & Rudin have shown that their doped membranes can be driven into oscillation, or even oscillate on their own (achieved "with some difficulty"), the transient responses of their membranes were very slow, with rise times of about 50 ms. [As an aside, tunneling occurs at the speed of light within the material itself. It is the capacitance of the circuit, along with the resistive components present that determines the transient response of the circuit.] By further analysis using the I-V characteristic with a realistic load line and the known capacitance of the membrane, the transient performance can be described in detail. The predicted, and separate, exponential rise and fall times are closely related to their test configuration and show little relevance to the rise times of *in-vivo* biological action potentials.

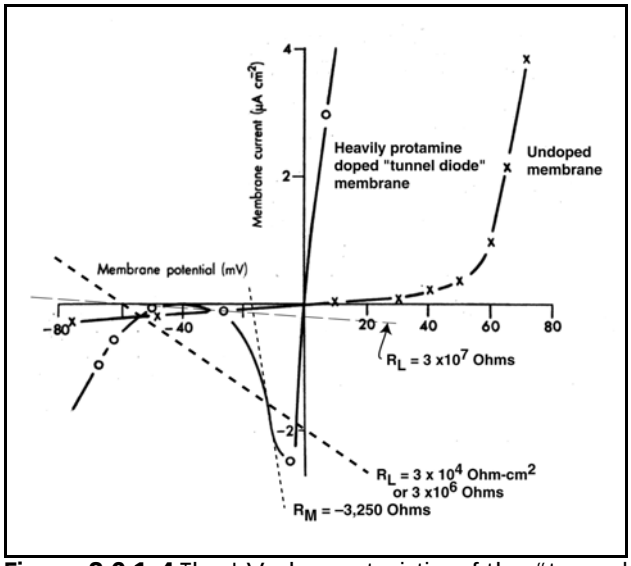

Figure 2.6.1-4 The I-V characteristic of the "tunnel diode" membrane of Mueller & Rudin. Two load lines have been added to the figure. See text.

Mueller & Rudin defined three distinct types of pseudo-action potential when exploring their synthetic biomolecular membranes. Each is based on a conceptual de-convolution of the observed response into components. Many of their waveforms involve a significant rectangular pedestal (their resistive action potential component) underneath a transient component. The transient operation of the circuit described by the above I–V characteristic and load line show the true nature of the observed responses *in-toto*. There is no need to de-convolve the waveforms into arbitrary components to match a putative alternate operation.

Mueller & Rudin employed only potassium chloride on both sides of their membranes (except when they only used sodium chloride) in their experiments. Their waveforms, though understandable from an electrical circuit perspective, are bizarre from the perspective of the neural system. The waveforms exhibit bistate and tristate stability and responses lasting for the duration of the pulse excitation. Many pulses lasted longer than one second. These waveforms are clearly not action potentials as found in the stage 3 neural system.

2.6.1.2.3 The *pseudo*–action potentials of endotherms *in-vitro*

The local environmental temperature plays a major role in the formation of action potentials. The temperature plays a major role in explaining the lethargy of exothermic animals that "sun bath" until mid day to raise their internal temperature. Endotherms on the other hand have developed internal methods of maintaining a nominally constant internal temperature.

It is common to perform *in-vitro* experiments on neural tissue from endothermic animals at other than normal endothermic temperatures. A majority of the reported action potential measurements and simulations related to mammals, primates and even humans have been performed at such unrealisitic temperatures. Such experiments must be considered physiologically irrelevant, or at least highly suspect pseudo-action potentials.

Solving sets of equations derived from Hodgkin and Huxleys papers on exothermic molluscs using numeric integration to determine a set of parameter values applicable to endothermic mammals is questionable on its face. Reporting these sets of values for other than endothermic

temperatures is of little physiological value.

As noted earlier, most of the data collected by Schwarz and colleagues et al. would be categorized as pseudo-action potentials because it was collected at non-endothermic temperatures. This is also true for the majority of the earlier work cited by those authors.

Smith et al. have provided action potential data for human's at 37C in **Section 9.1.2.3**.

2.6.1.2.4 The *pseudo*–action potentials of the cardiocytes

The cardiac literature frequently uses the term action potential to describe the signals recorded from myocytes in two different contexts. The nodal signal generator neurons generate a broad but bell-shaped monopulse waveform. They are distinctly broader (100x) than stage 3 action potentials. The cardiocytes focused on mechanical contraction operate as analog interneurons with a broad waveform with rapidly rising and falling edges. While these waveforms are closely associated with the mechanical action of the cardiocytes, they are best described as stimulation waveforms. They stimulate the release of the calcium ions that cause contraction. The pulses also exhibit a property not found in stage 3 neurons; they vary in pulse width as a function of the stimulus interval. . These waveforms will be discussed briefly in **Section 2.7.4**, and developed in detail in **Chapter 20**.

2.6.2 The encoding (ganglion) neuron of the PNS, mid-brain & cortex

Ganglion neurons, by whatever name, are found wherever it is necessary to transmit neural signals more than a few millimeters. They are introduced as a matter of power efficiency at the expense of some time delay. They typically appear first accepting signals from the stage 2 neurons of a afferent sensory modality. They appear later accepting signals from stage 4 neurons within the CNS.

Rodieck has provided a survey of the morphology of the ganglion cell in the retina and identified five major varieties including a total of at least 12 types[103]. Of these varieties, the axons of all "midget" ganglion cell types are known to project to synapses with parvocellular layers of the lateral geniculate nucleus. Separate studies indicate that the "parasol" ganglion cells project to synapses with the magnocellular layers. These paths suggest the functional performance of these two neuron types.

The ganglion cell is a neuron that operates as a relaxation oscillator (**Section 2.3.3**) to generate action potentials (**Section 2.6.1.1**) with pulse intervals that deliver information to the brain. It accomplishes this with the same morphological, topological and electrical element features as in the Bipolar Cell but it employs different values of the parameters.

Figure 2.6.2-1 shows the ganglion cell in its typical topology. It is receiving an input directly from one Bipolar Cell and an input from one Lateral Cell. In practice, the dendritic tree can be highly arborized, providing many individual inputs. The output is shown connecting directly to a synapse in the lateral geniculate body of the brain--and possibly to a second location elsewhere in the brain. The axon may be significantly longer than shown in this figure relative to the dendrite shown. If it exceed two millimeters, there are two distinctly different situations to be addressed, the introduction of myelination and the introduction of Nodes of Ranvier..

[103]Rodieck, R. (1998) The first steps in seeing. Sunderland, MA: Sinauer Associates, pg. 271-291

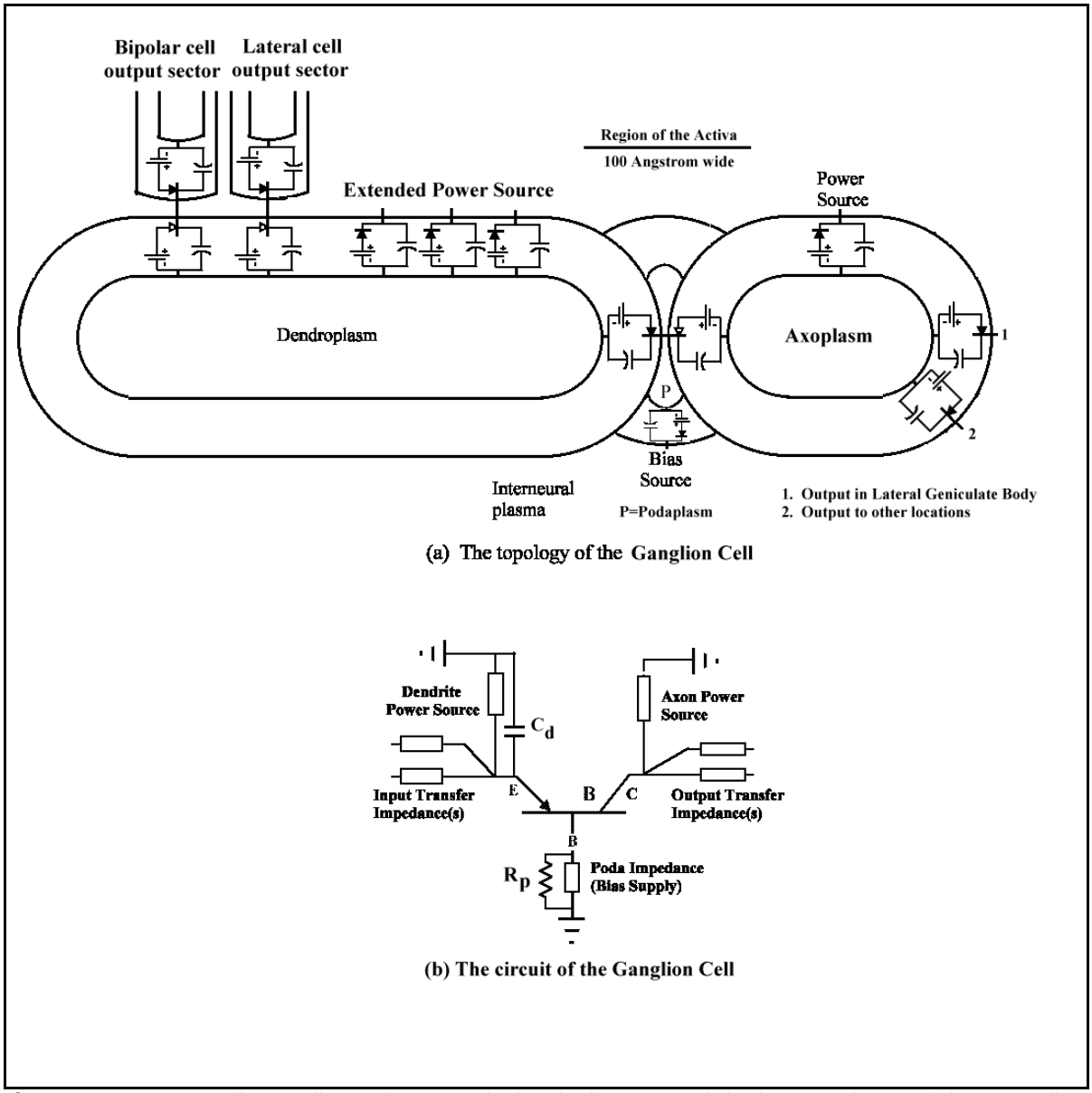

Figure 2.6.2-1 Ganglion cell topology and circuit diagram. (A); the topology of the ganglion circuit. (B); the electrical schematic of the cell showing a large dendro-capacitance.

As developed for relaxation oscillators, there are two parameters that are key to the operation of the Ganglion Cell; the poda impedance and a large capacitance (relative to the ones encountered so far). In the Ganglion Cell, the poda impedance is so large that it actually distorts the Activa transfer function due to internal feedback. If this distortion is large enough and the biases are properly arranged, the output characteristic of the Ganglion Cell will be bimodal (typically a pathological condition within the neural system). If, in addition, there is a large capacitance shunting either the emitter or the collector terminals of the Activa, there will be sufficient phase shift related to the feedback to cause the net feedback to be positive. This positive internal feedback will put the circuit in a position to generate one or more monopulse oscillations in response to a sufficiently large input signal. If it oscillates continuously, its frequency will be determined by the time constant of the circuit containing the capacitor and the time constant of the transfer impedance closest topologically to the capacitor. The figure

emphasizes these two features by showing them explicitly in (b) and implicitly in (a).

Note in (a) that an extended power source sector in the wall of the dendrite will automatically provide a significant shunt capacitance between the dendroplasm and the interneural plasma. This capacitance is shown as C_d in (b). A similar result could be obtained in the axon region (not shown). At present, there is no data in the literature that indicates whether the capacitance needed for action potential generation is in one location or the other. The resistive component in the poda lead is not as easily shown graphically in (a). The smaller the sector of the external poda membrane or the longer the poda conduit, the larger the resistive component of the diode characteristic. Thus R_p is shown explicitly only in (b).

In normal operation, the Ganglion Cell is biased in either of two conditions as shown in [**Figure 2.6.1-2**]. If an analog signal in presented to the emitter that causes the emitter to base potential to become more positive, the free-running oscillator will reduce its pulse-to-pulse interval for the duration of the stimulation in proportion to the magnitude of the change in stimulation. If the emitter to base potential becomes more negative, the pulse-to-pulse interval will become longer. Thus, this type of ganglion neuron is able to produce monopolar output signals that encode bipolar input information. In the case of the driven oscillator, a positive stimulus will cause a single pulse to be produced. If the stimulus remains positive, additional pulses will be produced at an interval that is reduced in proportion to the stimulus amplitude. This type of ganglion neuron can only encode monopolar input information. These modes of operation are illustrated in **Figure 2.6.2-2** as they are encountered in the visual modality of mammals. The two frames show the transfer functions of the ganglion neurons as a function of their relative input signal potentials.

In the visual modality, the driven oscillators (a.k.a. parasol ganglion neurons) support the monopolar luminance channels (R-channels) of vision. In the absence of stimulation, they rarely produce any action potentials. The free-running oscillators (a.k.a midget ganglion neurons) support the bipolar chrominance channels. These channels include the Q-channel (long wavelength channel minus the mid wavelength channel). These channels produce a nominal 30 Hertz pulse stream in the absence of stimulation. They are driven to higher frequency by positive stimulation and to lower frequencies by negative stimulation. The asymmetry of these characteristics account for many interesting phenomena associated with vision.

In terms of polarization, the action potentials always are positive going with respect to the negative potential of the axoplasm during the quiescent period of the circuits operating cycle. In this sense they are depolarizing.

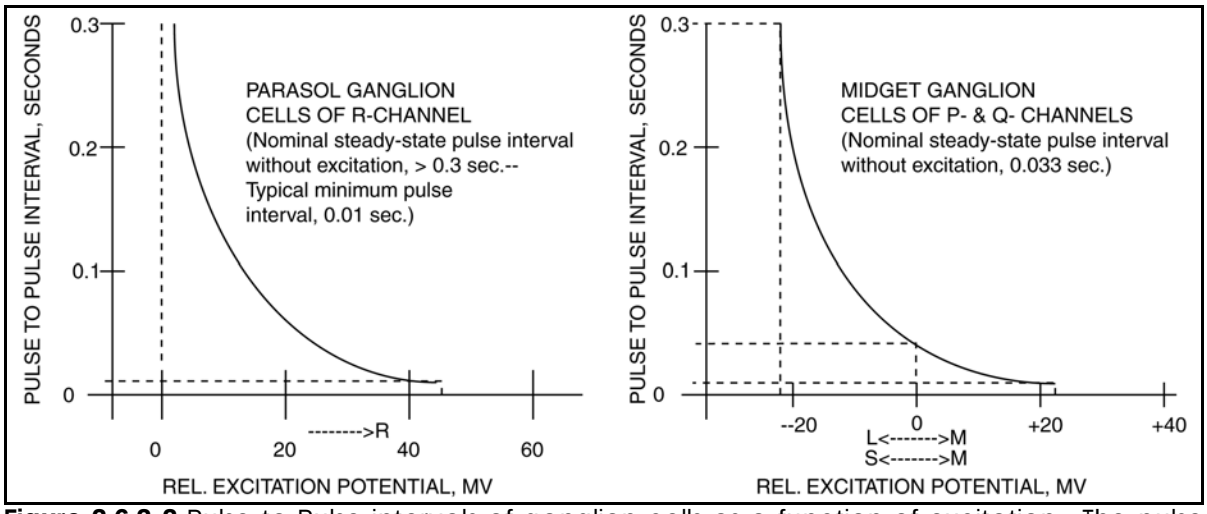

Figure 2.6.2-2 Pulse to Pulse intervals of ganglion cells as a function of excitation. The pulse interval of R-channel ganglion cells is indeterminately long in the absence of excitation. The pulse interval of the P- and Q- channel ganglion cells exhibits a nominal value of 0.033 seconds (a calculated frequency of 30 Hz.) in the absence of excitation. It appears that the polarity of the signals applied to the midget ganglion cells is such that excitation of the short wavelength (S-channel) and long wavelength (L- channel) photoreceptors tends to drive the pulse to pulse interval longer. This has a profound impact on the transient after-effects related to flicker.

In general, the minimum pulse-to-pulse interval for the ganglion neurons appears to be near 0.0066 seconds (a calculated instantaneous frequency of 150 Hz) and the maximum interval appears to be near 0.33 seconds (about 3 Hz).

2.6.2.1 Signal input via the poditic conduit

Although not a well-developed situation in the neuroscience literature, there are indications that some ganglion cells do have arborized poditic conduits that accept signals. These signals would be treated as out-of-phase with respect to the dendritic inputs. They could therefore subtract from the critical signal amplitude needed to initiate generation of an action potential. If an exceptionally large signal, it could be considered inhibitory

2.6.2.2 The introduction of myelin in connection with the axon

As indicated above, a lengthening of the axon of the ganglion neuron relative to the bipolar neuron can introduce capacitance in shunt with the other impedance elements of the output circuit and lead to oscillation in the ganglion circuit. However once a critical level of capacitance is reached, additional capacitance is not desirable. This lumped capacitance requires the Activa to switch more current between the input and output circuit to achieve the same level of action potential amplitude. To avoid this problem while achieving maximum axon length, a portion of the axon is wrapped in myelin. This process has the effect of thickening the dielectric between the axoplasm and the surrounding plasma and thereby lowering the effective capacitance per unit length of the axon.

As the axolemma necessarily becomes a cylinder as it lengthens, another electrical phenomenon is introduced. A conducting cylinder surrounded by insulating material or an insulating cylinder surrounded by conductors introduces an inductance per unit length of the cylinder.

As a result, an extended axolemma contributes two electrical elements that profoundly affect the performance of a given Activa. The lumped capacitance near the unmyelinated ends of the axon, in combination with the resistive elements of the collector (axon) circuit directly control the temporal performance of the axon. The distributed capacitance, in combination with the distributed inductance, both on a per unit length basis, control the propagation velocity of signals along an extended axon. The propagation of neural signals is a phenomenon not previously described in neuroscience. The term propagation is introduced here to differentiate

stage 3 neuron signal distribution from the concept of signal conduction (by chemical diffusion) which is not employed within a long axon. Propagation is a distinctly different mechanism. It is a key to understanding the operation of the stage 3 neurons (**Chapter 9)**.

2.6.2.3 Waveforms at the poditic terminal before and during pulse generation

Mastronarde has described the waveforms measured at the poditic terminal of a pyramid (encoding) neuron of the lateral geniculate nucleus using early techniques of the 1960's[104]. "These extracellular signals are shown inverted (negative up), as in earlier reports. Each sweep is triggered by a firing of the ganglion cell. The sweeps from the LGN cell show the two characteristic features of excitatory input described in earlier dual-recording studies. . . .This deflection, called the S potential, has been interpreted as an extracellular signal arising from the excitatory postsynaptic potential. Second, spikes from the LGN cell often appear within a short time after the start of the S potential."

Bishop and colleagues have provided most of the background and the proposed explanation of the S potential based on extracellular recordings[105]. Their data was collected in an early day when sine waves were used as the baseline timing generator. They were exploring neurons near the surface of the dorsal nucleus of the LGN in cat. **Figure 2.6.2-3(left)** shows their basic waveform with its separation into identifiable but arbitrary segments. Text labels have been added in accordance with the nomenclature of this work. More explicitly, the S potential is being measured between the contact labeled F and the fluid surround in **Figure 2.6.2-3(right)** reproduced from **Figure 2.5.2-2** above. The fluid is represented by the poditic impedance, R_P in [**Figure 2.6.2-1**].

Bishop et al. do not provide a graphic of their experimental configuration. However, their description is highly consistent with the right frame of this figure. They note their extracellular probe signals are most identifiable when the probe is near the "soma" rather than the hillock or the myelinated axon. They note the closer the probe is to the "cell," the smaller the B component and larger the S–A component. They also note that the transition from the A representation to the B representation is typically accomplished by changing the stimulus intensity (as expected within the sub-threshold region of a monopulse oscillator).

The Bishop et al. discussion is totally compatible with a three-terminal pyramid cell (a stage 3A neuron) within the LGN. It provides excellent confirmation for the Electrolytic Theory of the Neuron. The Bishop waveforms have never been explained in terms of the chemical theory of the neuron and/or a two-terminal neuron. ***It is difficult to ask a question about the source of the S potential or the ratio between the poditic impedance and the axon load impedance in the context of the chemical theory of the neuron.***

---

[104]Mastronarde, D. (1987b) Two classes of single-input x-cells in cat lateral geniculate nucleus. II. Retinal inputs and the generation of receptive-field properties *J Neurophysiol* vol 57(2), pp 381-413

[105] Bishop, P. Burke, W. & Davis, R. (1962) Single unit recording from antidromically activated optic radiation neurones. *J Physiol Lond* vol 162, pp 432-450

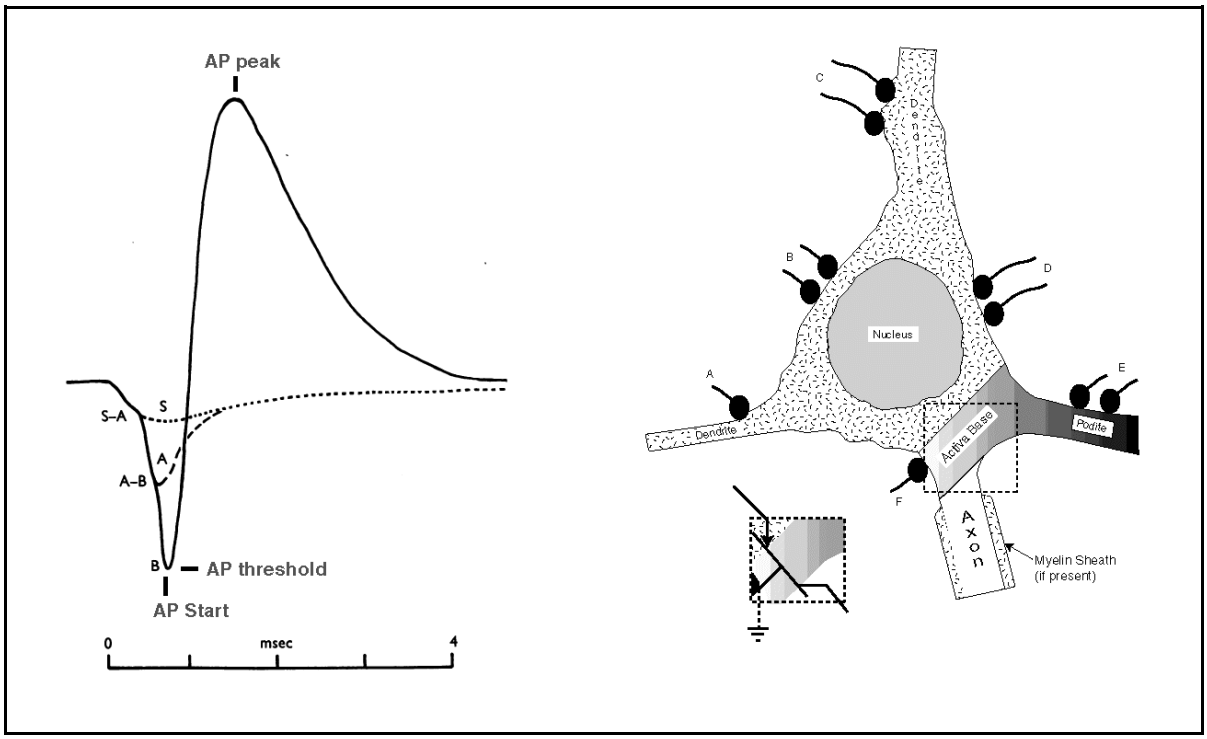

Figure 2.6.2-3 Nomenclature used by Bishop et al. in discussing the extracellular LGN cell responses. Up is negative and the height of the negative peak above the quiescent level is typically 5–8 mV. Left; figure from Bishop et al., with text labels by this author. Stimulation is applied at time = zero. The response is in fact the current through the poditic terminal of the neuron multiplied by the impedance of the external fluid environment with the S and A segments reflecting sub threshold currents primarily in the dendritic to poditic circuit. the B response represents the poditic current dominated by the current in the axon–poditic circuit during action potential generation. See text. Right; Typical action potential generating pyramid cell showing current flowing through the normal biasing connection at F of the poditic neural circuit in to the surrounding fluid (dashed line from podite to ground in inset. By introducing a voltage probe near F, the waveforms on the left are normally acquired. See text. Original art on left from Bishop et al., 1962. Art on right from **Figure 2.5.2-2** of this work

The pulse width of the illustrated waveform B is the same as the nominal action potential. Whereas the typical action potential is on the order of 100 mV positive-going in the axolemma, this waveform is about 5-8 mV negative-going at the base or poditic terminal of the neuron because the two waveforms share a common current profile but exhibit different impedances. As the action potential goes positive in potential, the S-potential goes negative a proportional amount suggesting the ratio between their respective impedances.

2.6.3 Electrical characteristics of pulse regenerators–Nodes of Ranvier

The ganglion neurons do not grow following neurogenesis. Thus their requirements related to homeostasis are low. However, even when myelinated, the attenuation of signals propagated along their axon is limiting (**Chapter 9**). Therefore, a feature is needed that can regenerate the action potential pulses without requiring an additional neuron nuclei and supporting structures. The Node of Ranvier satisfies this need. The axon is subdivided into axon segments for signaling purposes and the segments are separated electrically by Nodes of Ranvier, but the segments remain part of the ganglion neuron for homeostasis. Because of the attenuation incurred, the Nodes of Ranvier are typically spaced at intervals of two millimeter or less (while the myelinated axon segments are typically less than 10 microns in diameter, a ratio of 200:1).

Measurements related to individual pulses traveling along the ganglion axon have been described as saltatory (showing periodic increases in amplitude with distance from the hillock of the ganglion neuron).

The Node of Ranvier are specialized in that they accept only action pulses at their input and generate action pulses at their output. They contain Activa circuits that are configured as driven monopulse oscillators. Each Node of Ranvier accepts pulses, of arbitrary spacing, and regenerates the pulses after a fixed time delay. The resulting pulse stream at the axon pedicle exhibits the same pulse-to-pulse spacing as the original pulse stream but a fixed delay dependent on the number of Nodes of Ranvier encountered. There is no performance limit as to how many Nodes may occur within a single axon of a ganglion cell. As in man-made pulse systems, any waveform distortion, other than a differential delay on a pulse-to-pulse basis, is insignificant.

A feature of the electro-magnetic mode of propagation employed in stage 3 projection neurons is that the signal propagates along the axoplasm without regard to the direct current potential gradient along the axolemma or the potential at the two ends of each axolemma. This allows the two ends of each axon segment to be supported by separate electrostenolytic supplies. A detailed discussion of electro-magnetic propagation along an axon will be developed in **Chapter 9**. This section will focus on the unique cytological/histological configuration of the Node of Ranvier and how they contribute to the regeneration of the signal pulses by each Node.

2.6.3.1 Introduction of the Node of Ranvier of the axon

Wrapping a significant part of the axolemma in myelin is an effective way of allowing the axolemma to be increased in length. However, it is not an adequate modification if the action potential is to be projected over distances beyond a few millimeters. In that case, active signal amplification is necessary. This can be provided by analog amplifiers while accepting the degradation of the signal waveform implicit in transmitting a pulse waveform over a relatively simple electronic transmission line, e.g., one without equalization stages to compensate for the normal phase distortion per unit length. The alternate approach is to regenerate the waveform. This actually involves replacing the received signal waveform with an alternate waveform, typically of similar waveshape. This regeneration of the waveform is the purpose of the Node of Ranvier.

The Node of Ranvier is a driven monopulse oscillator such as those discussed in **Section 2.6.3** above. This oscillator is unique in that it is introduced between sections of interaxon formed by subdividing the axon of a single cell. The resulting ganglion cell takes on a greater degree of complexity. However, the complexity is a result of replication and not new techniques. See **Section 2.6.4.** The difference between a ganglion with and without Nodes of Ranvier is a subject of interest in morphology. However, if the questions of genesis and metabolism are set aside, the difference is trivial based on cytology and signaling performance.

2.6.3.2 The topology & cytology of the Node of Ranvier

Figure 2.6.3-1 shows the topology of the Node of Ranvier between two axon segments. Each segment is a totally enclosed tube of axolemma, except for the homeostatic shunt (which

should be shown connecting the two axoplasms). In the areas wrapped by the myelin sheaths, the ratio of capacitance to inductance supports propagation. In the areas between the wrapped portions and the junction area, each piece of the axon is represented by a lumped capacitance. This capacitance and represents a matching section from the perspective of electrical filter theory. There may also be dedicated electrostenolytic power supplies in these areas (not shown). The important feature is the Activa formed between the rounded ends of the axon segments, with the base region of the Activa formed outside of the lemma, and therefore the neuron. It is the same configuration as the previously discussed synaptic junction. In this case, it is important that the electrolytic path between the base region, shown hatched, and the extra neural matrix be constricted. When constricted, the impedance of the path is sufficient to act as an internal feedback impedance like the poditic impedance at the Activa within the neuron. This internal feedback will introduce a unique characteristic into the *input impedance*, the *output impedance* and the *transfer impedance* of the neuron. When combined with the lumped capacitance of the matching sections, this feedback impedance supports the operation of this conexus as a relaxation oscillator acting as a driven oscillator (an action potential regenerator).

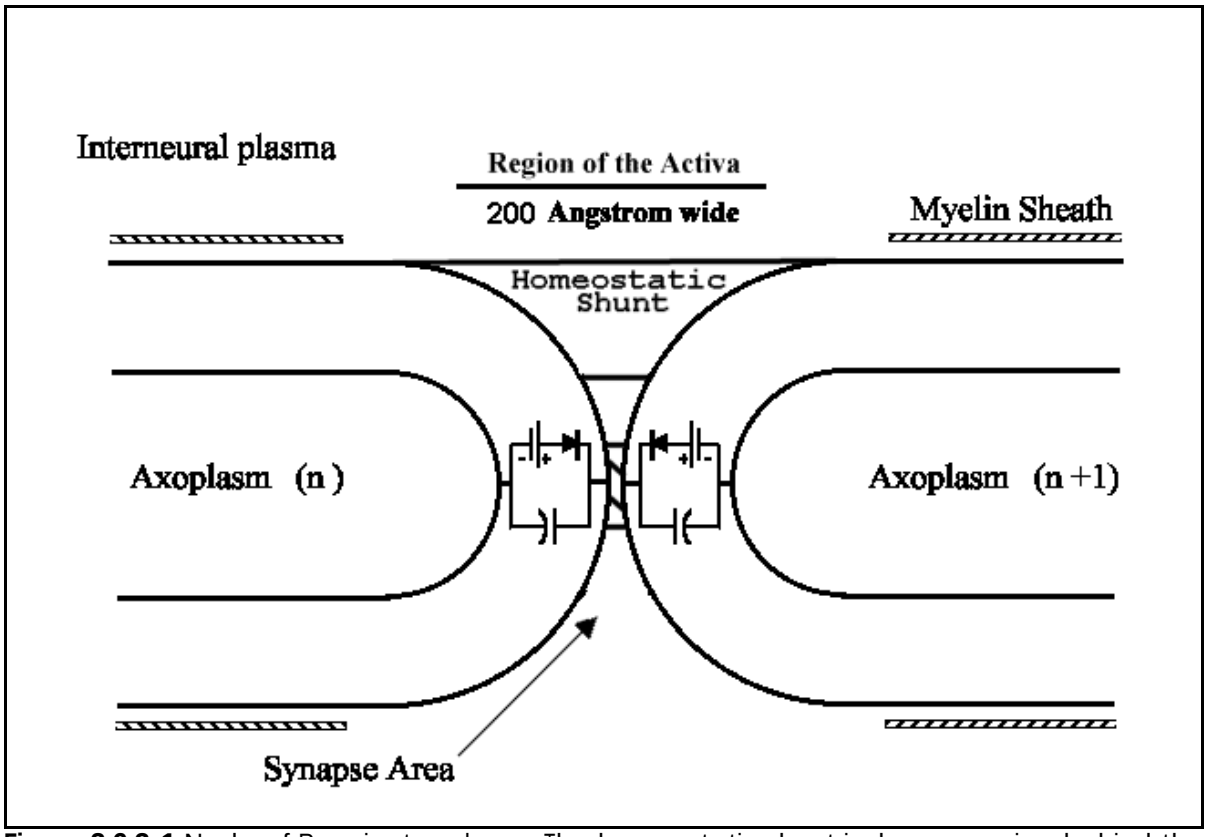

Figure 2.6.3-1 Node of Ranvier topology. The homeostatic shunt is shown passing behind the axon. The synapse area outside of the semi-metallic water base is highly constricted resulting in a resistive poda impedance. The unmyelinated matching sections of each axon segment represent significant capacitances.

Figure 2.6.3-2 provides a higher resolution image of the cytology of the Node of Ranvier.

Frame A shows the gross cytology of the axon segments at a resolution beyond the resolution of light microscopy in caricature, including the nominal reticulum of each axon segment with a diameter of 0.3 microns. The outer ends of the two axolemma are not detailed. It shows the axolemma (follow the lower axolemma) necking down to form a nominally 0.3 micron diameter

junction area. It simultaneously supports one or more areas of electrostenolytic activity in the larger synaptic junction area (black line segments representing potential regions of charge concentration).

Frame B expands the scale further and shows in caricature the structure observed by electron microscopy. The caricature shows two small synaptic disks representing a few of the elements in the full synaptic array of 0.3 microns diameter. Each of the tubes extending from the reticulum press against the axolemma resulting in a puckered surface for the axolemma within the synaptic array. The spacing between these puckered areas of the juxtaposed lemma are less than 100 Angstrom (nominal value is 45 Angstrom). One area of electrostenolytic activity is also shown.

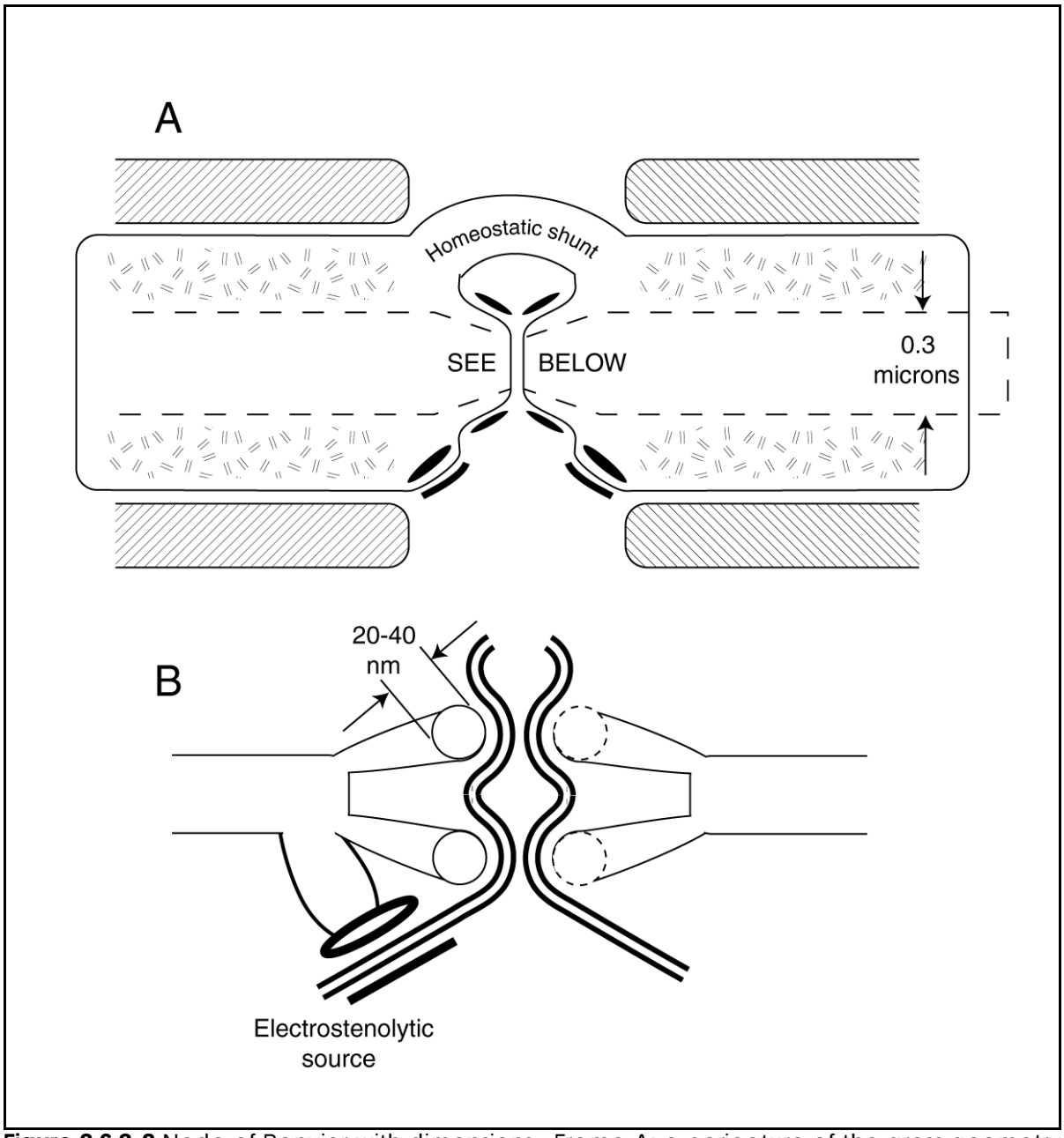

Figure 2.6.3-2 Node of Ranvier with dimensions. Frame A; a caricature of the gross geometry (but the junction area is still below the resolution of light microscopy). Other potential areas of high charge density shown by black bars. See text. Frame B; the detailed geometry (showing only two of the array of a few dozen synaptic disks). Negative charges accumulate initially in the area of the black ellipse.

It is difficult to locate electron microscope images illustrating these features. Typically the investigators were not seeking detail about the Node of ranvier and the features are extremely small, and the homeostatic shunt is much easier to image.

Figure 2.6.3-3(top), taken from a larger image does show the juxtaposition of the rounded ends

of the two axon segments[106]. The magnification is not high in this very early electron microscope image. It is quite clear that these two axon segments do not form a continuous fluid channel between them, although the structure above the axolemma may represent the homeostatic shunt. The active region of the Node, the area of the Activa, is less than 100 Angstrom wide and 100 Angstrom in height (probably a diameter) in this image. The bottom of that same figure shows a more recent image from Krassioukov in Ramachandran (page 824). By staining with osmic acid, it also shows the continuity of the homeostasis channel along with the putative butt joint character of the Node of Ranvier.

Similar, but less clearly delineated figures of Nodes of Ranvier can be found in Waxman[107],

Page 518 of Ramachandran shows an alternate representation of a Node of Ranvier obtained by rotating the neuron 90 degrees when preparing it for electron microscopy and selecting a different slice. As a result, the actual Node is obscured behind the homeostatic path. Note the structure in the nodal gap on each side of the homeostatic path does not easily relate to the suggested continuous homeostatic path

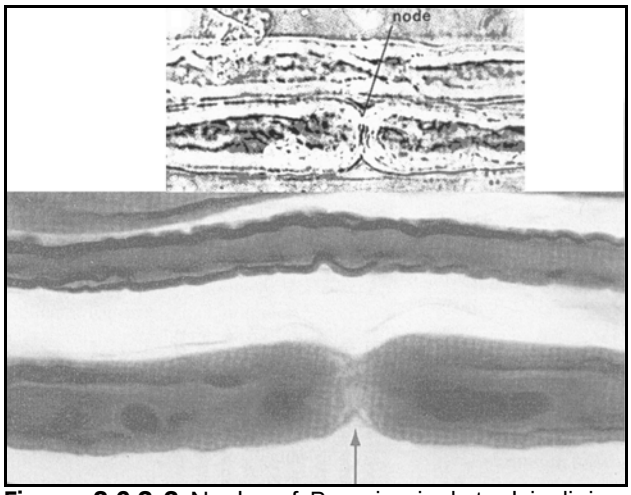

Figure 2.6.3-3 Node of Ranvier isolated in living tissue by dissection. **Top**; the internal synapse between the two segments of the axon is clearly seen. It is also clear that the point of contact is extremely small and that the base region has direct conductive contact with the medium surrounding the nerve at this "void" in the myelin sheath. From Ottoson & Svaetichin, 1953. **Bottom**; a similar image of a peripheral neuron pointing to the Node of Ranvier. It shows the butt joint of the Node as well as the continuity of the separate homeostasis channel adjacent to it. From Krassioukov, 2002.

2.6.3.3 The circuit schematic of the Node of Ranvier

The topology indicates the Node of Ranvier utilizes the same circuit schematic as the driven relaxation oscillator of the previous section. It depends on the poda impedance, created by the limited electrolytic access of its base with the extra-neural matrix, to introduce internal feedback. It uses the lumped capacitances associated with the two matching sections to provide the necessary phase shift to achieve a feedback factor of +1.0.

As indicated in the earlier discussions, Nodes of Ranvier and other driven monopulse regenerators need not have a significant current through the Activas during the quiescent period. They are typically biased to cutoff (–140 to –154 mV) during this period.

With this topology and circuitry in mind, portions of Tasaki's[108] text make very interesting reading because the effects of pharmacological treatments become clearer. However, his treatment of a series of interaxons and Nodes of Ranvier as a passive cable of only resistors is far too elementary.

He notes that the effect of an anesthetic on the myelinated portion of a neuron is virtually nil.

---

[106]Ottoson, D. & Svaetichin, G. (1953) The electrical activity of the retinal receptor layer *Also*, (1983) Physiology of the Nervous System. NY: Oxford Press page 27

[107]Waxman, S. Ed. (1978) Physiology and Pathobiology of Axons. NY: Raven Press Figs 2-6, 2-18, 2-19 &. 2-20

[108]Tasaki, I. (1982) Physiology and electrochemistry of nerve fibers. NY: Academic Press. pp. 37-61

It is only when it is applied to the area of a Node of Ranvier (or other terminal area) that the anesthetic has an impact.

2.6.4 The decoding (stellite/stellate) neuron of the mid-brain and cortex

The term stellate neuron has been used very widely in neural research associated with the morphology/histology of the CNS. Traffic analysis would suggest many different functional types of neurons within this general morphological classification. However, the functional operation of these types of neurons has not been specified.

This work will use the functional label *stellite neuron* to describe a typically stellate (star-shaped) neuron whose purpose is to decode the action potential pulse stream it receives from a stage 3 ganglion neuron and generate an electrotonic replica of the waveform originally encoded by the ganglion neuron (regardless of its physical location within the organism).

> In this respect, the stellite neurons operate in a manner analogous to a "ratio detector" circuit in a frequency modulation (FM) radio. The ratio detector circuit is slightly different from the "frequency discriminator" circuit used in higher quality FM radios.

Depending on the quiescent bias between the emitter and the base of the Activa within the stellite neuron, the average output level may be at the intrinsic axoplasm potential due to electrostenolytic action, or it may be at a less negative quiescent value caused by continual current flow in the collector circuit of the Activa. If it is at the intrinsic level, the signal output is necessarily a positive going one, a de-polarization, for increase signal input levels. If the quiescent level is less negative (closer to zero) than the intrinsic electrostenolytic level, the output signal can be either more positive (de-polarizing) or more negative (hyperpolarizing) depending on the rate at which pulse signals are applied to the input of the circuit.

Figure 2.6.4-1 Illustrates the basic circuit of a generic stellite pulse decoding circuit. The circuit is at cutoff in the absence of any stimulation, the horizontal axis of the inset is at –140 to –154 mV. The nominal collector potential during recovery of the waveform shown (dashed line) is –70 mV. The circuit accepts pulses at its dendritic input of nominal pulse amplitude (100mV). This amplitude would suggest either,

- local regeneration by the last Node of Ranvier immediately prior to the axon synapsing with the dendritic input via an analog synapse, or
- the synapse following the axon pedicle acting as a phasic pulse regenerating Node of Ranvier in connecting to the dendrite of the stellite neuron.

The literature does not provide sufficiently precise information to resolve this dichotomy.

The circuit may accept inputs at its poditic terminal acting to inhibit the operation of the circuit under specific conditions. The values of the collector capacitance and resistive component of the impedance shown result in an integration frequency limit of nominally 100 Hz. The output shown is the result of an analog input signal to the stage 3 ganglion neuron consisting of a sinewave sitting on a pedestal. As a result, the pulse stream passed to the stellite neuron consisted of a set of pulses exhibiting a distinct average pulse rate but groups of pulses gather together at point of maximum analog amplitude and groups of pulses thinned out at points of minimum analog amplitude. Specific analog signal recovery examples will be illustrated in **Chapter 9**.

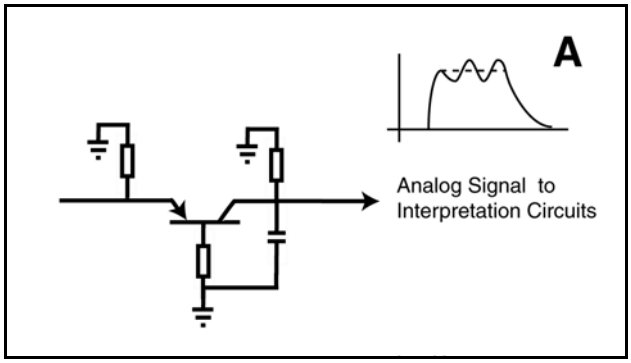

Figure 2.6.4-1 Fundamental stage 3 pulse decoding neuron. The time constant of the collector (axon) circuit is set to allow the recovery of a sinewave (typically 100 Hz maximum) on a pedestal.

2.6.4.1 Cytology of the stellite neuron

The cytology of the basic stellite neuron is similar to that of the basic ganglion cell compared to the fundamental neuron typified by the bipolar neuron. The output impedance associated with the stellite

neuron consists of a larger capacitance than found in the bipolar neuron. In this case, there is little or no feedback through the poda impedance and the circuit is not subject to oscillation. The capacitance is so high, that the circuit accepts individual current pulses injected into the axoplasm by the Activa and does not dissipate the resulting change in voltage within the time interval expected for the following action potentials. Thus the average voltage of the axoplasm becomes a facsimile of the average current caused by the injection of a unit charge in response to each action potential arriving at the stellite neuron divided by the pulse interval between those action potentials.

2.7 Other hybrid neurons, the hormonal, visceral & mobility interface

Several special classes of neurons have been discovered that exhibit unusual properties that suggest they be described as hybrid neurons. They are not associated with signaling between two neurons. One of these classes will be labeled stage 7 neurons. These neurons are similar to the conventional stage 3 pulse neurons addressed in **Section 2.6**. However their axon termini are modified. The stage 7 neuroaffector neurons pass "information" to neural and non-neuron tissue by releasing a variety of chemical agents (in the case of neurons, these chemical agents are received parametrically, via auxiliary receptors). The actions of these stage 7 neurons are best described using a multidimensional matrix since these actions can be quite complex. **Figure 2.7.1-1** presents a preliminary table organizing these actions.

Stage 7 Neuroaffectors

	Paracrine		Endocrine		Exocrine	
			Within CNS	Outside CNS	Digestive system	Outside the body
						Pheromones
Target	Striate muscle	Smooth muscle				
Agent	Acetyl-choline	Nitric Oxide				Specific alcohols (in insects)

Figure 2.7.1-1 Preliminary table of neuroaffector actions. This table will be populated in Chapter 16 of this work.

When affecting non-neuron tissue, the agents can act between the releasing neuroaffector and a single orthodromic cell, or they can act on a broader range of cells essentially simultaneously. When the agent affects only a single striate muscle cell, the action is considered *paracrine* (acting at a short range). This is the situation that has long been associated with the label synapse.

When the agent affects more than one orthodromic cell, the action is considered *endocrine*. This is the essence and origin of the endocrine hormonal system.

Some authors have chosen to describe hormones that only affect tissue within the blood-brain-

barrier of the CNS. Such action is occasionally labeled *pericrine*, acting at a longer range than paracrine but shorter than endocrine.

Finally, some agents released by neuroaffectors are released outside the organism as a whole, either into the external environment or into the digestive tract. These agents are described as exocrine agents. They may be exocrine hormones or exocrine enzymes associated with digestion.

When one of these chemical agents affect neurons, it is not as a signaling agent but as a modulating agent (affecting the efficacy of the neuron in handling the signaling by electrons between neurons).

The subject of neuroaffectors is so broad, it will be discussed in detail in **Chapter 16**. The following material will summarize material found there.

The paracrine, endocrine and exocrine actions appear to employ significantly different chemical agents. The paracrine agents are molecules with a molecular weight of less than 146. The endocrine agents occupy two distinct groups, those based on cholesterol and those based on lengthy peptides. Some of these agents involve molecular weight considerably higher than 146. The exocrine agents include pheromones that are typically volatile alcohols of low molecular weight..

2.7.1 The paracrine stage 7 neuroaffector neurons

The interface between a stage 7 neuroaffector neuron and striate muscle tissue has frequently been described as a synapse and that label has played a major role in exploratory research defining the synapse. However, this interface will be examined more closely in this section in order to arrive at a more precise terminology.

Two chemicals are recognized as the major paracrine agents, acetylcholine and nitric oxide. Neither of these is considered a hormone in most texts. They are generally associated with only very local neuron-to-cell action. They are neither peptides or derivatives of cholesterol like most hormones. Acetylcholine (ACh) was one of the first chemicals identified as causing striate muscular *contraction* under neural control. More recently, nitric oxide has been identified as causing *relaxation* of the perennial contracted state in smooth muscle.
under neural control.

The action of the paracrine neuroaffector can be described as releasing a chemical agent that has been stored in a different form on a stereochemical receptor site on the external surface of the axolemma. The release is controlled by the potential of the axoplasm with respect to the surrounding neural matrix.

The chemical reaction involved in release of nitric oxide is reasonably well understood. L-arginine, is the amino acid that binds to the neuroaffector neuron. When in the presence of oxygen (O_2) and at a specific axoplasm potential, it can react to form nitric oxide (NO), or •NO (to more clearly indicate its free radical status). Oxygen is readily available via hemoglobin. Both the nitric oxide and the residue, iso-leucine are released from the stereochemical receptor site. Iso-leucine is either cleared from the body or reprocessed back into L-arginine. Nitric oxide has a very short lifetime within the organism and is only affective over very short (paracrine) distances. Nitric oxide is occasionally described as produced by neuronal nitric oxide synthesis (nNOS) to differentiate it from that produced by enzymatic means (eNOS).

The chemical reaction involved in release of acetylcholine by the neuroaffectors is poorly understood. It is important to note that acetylcholine is classified as a choline and not a catacholine, which is a distinctly different chemical group. ACh is a much more complex molecule than nitric oxide. Its normal generation within the organism is usually described as a reaction between choline and Acetyl Co-A. However, there may be alternate paths not widely documented, such as the direct combination of choline and acetate at a substrate surface. Choline is a nitrogenous alcohol, but there is no indication it is capable of releasing a simple agent like NO. No proposal could be found as to how the *formation* of ACh could be controlled

by the neuroaffector neuron. Neither was any proposal found as to how ACh, once formed could be *released* by a neuroaffector, except conceptually by a putative vesicle. The presence of choline as one moiety of the outer phosphatidyl choline bilayer of the neurolemma provides many possibilities. The chemical hemicholinium-3 is known to inhibit the formation of acetylcholine, probably by occupying the choline binding site of the enzyme choline acetyltransferase (CAT) or of the receptor site of the outer bilayer. The structure of both acetylcholine and hemicholinium-3 suggest coordinate chemistry, rather than or in addition to reaction chemistry, may be involved in the formation of acetylcholine.

The pharmacology of ACh and its antagonists, blockers, inhibitors and chemicals that mimic its actions is highly developed. There appear to be two major "receptors" associated with ACH, the nicotinic and muscarinic ACh receptors. These receptors are named without regard to their function. They were named for their joint sensitivity to ACh and these other chemicals. The action of acetylcholine within the neuron/muscle junction is unknown. However, the effectiveness of acetylcholine outside the junction is terminated by hydrolysis, a chemical reaction that forms two products (choline and acetate) which are essentially inactive. Diffusion of ACh from the synaptic region plays a minor role because AChE is so active. A broad overview of Acetylcholine is available on the Internet[109]..

The subject of signaling between neurons and other types of tissue involves more than a synapse. **Chapter 16** develops all of the methods by which the neural system interfaces with the rest of the organism. It shows that besides direct cell to cell connections, one group of terminal neurons (stage 7) are the initial elements of the hormonal system..

2.7.1.1 The paracrine stage 7 neuron interface with striate muscle

The interface between a stage 7 neuron and a striate muscle myocyte has frequently been associated with or described as a synapse. In this work, it is defined as the chemical synapse between a neuron and a non-neuron in a confined space. Such a synapse is generally associated with the end-plate of a myocyte.

Ganong has presented a detailed cross-section of an end-plate[110]. The complex intertwining of the multiple pedicles of the neuroaffector axon and the convoluted surface structure of the end-plate of the myocyte insures any chemicals released at the pedicles remains in the immediate area for a prescribed period. **Figure 2.7.1-2** presents a simplified version. The axon termini are shown only in cross section, although they extend in and out of the plane.

---

[109]- - - http://courses.washington.edu/chat543/cvans/sfp/acetylch.html

[110]Ganong, W. (1975) Review of Medical Physiology, 7th Ed. Los Altos, CA: Lange Medical Publishers pg 56

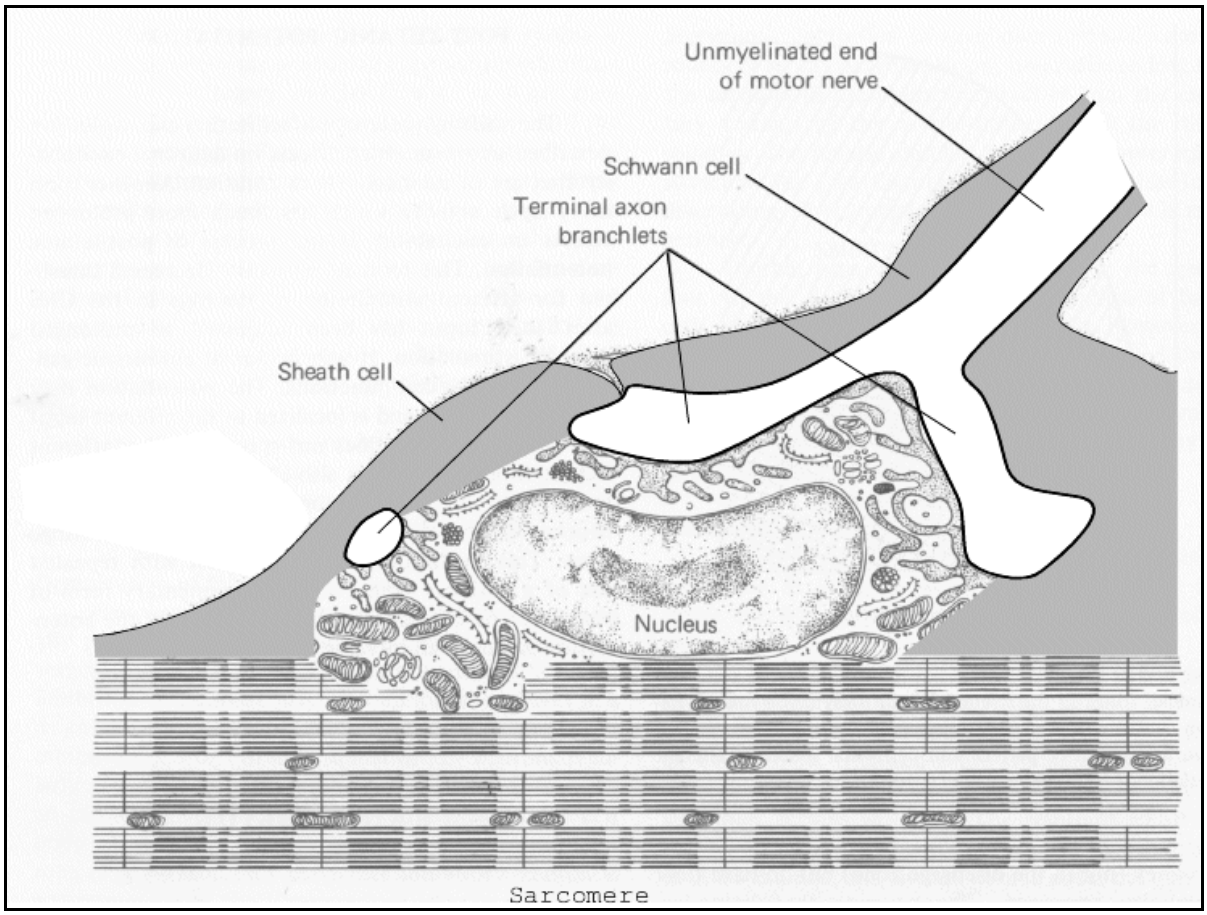

Figure 2.7.1-2 Schematic of the neuro-affector/myocyte interface for striate muscle. Note the limited fluid conductance between the point of release of the neuroaffector agent and the surrounding matrix. Myelination of the stage 7 neuroaffector (motor nerve) not shown. Simplified from Ganong, 1975.

It is proposed the neuroaffector agent, primarily if not exclusively acetylcholine, is created on the outer surface of the pedicle, at an area of type 2 lemma optimized for the stereochemical capture of the necessary progenitor chemical. Upon capture, this chemical is stored on the surface until the axoplasm potential, relative to the exterior matrix is changed to cause the generation, and release, of acetylcholine and ammonia. The ammonia diffuses into the surrounding matrix.

The acetylcholine stimulates the myocyte until it is eventually hydrolyzed into choline and acetic acid (acetate). The time constant of the acetylcholine presence is sufficient to insure the muscle establishes a condition of tonicity even though the release of stimulant by the neuroaffector is pulse driven. Choline and acetic acid are removed by diffusion into the surrounding matrix

How the acetylcholine stimulates the myocyte to cause contraction of the sarcomere is outside the scope of this work.

2.7.2 The endocrine stage 7 neuroaffector neurons–The hormonal system

The endocrine neuroaffectors are the beginning of the hormonal system as normally conceived. The volumetric requirements for hormones leads to the formation of knots of neuroaffector neurons into what are known as the primary glands, the hypothalamus, one of its minor

components the epiphysis, one of its major components the hypophysis (pituitary gland), etc. The hypophysis is very interesting because part of its neural tissue is formed within the blood-brain-barrier (BBB) of the CNS but its neuroaffector termini are outside of the BBB. This gives the pituitary gland immediate access to the cardiovascular system which runs through the gland. The other portions of the hypothalamus generally have their neuroaffector termini within the BBB of the CNS. The agents they release are typically described as pericrine, and operate primarily within the CNS.

The large hypophysis releases at least six primary hormones that are used to affect the output of a number of more remotely located thyroid, parathyroid, and adrenal glands along with the gonads and portions of the pancreas. The complexity of many of these agents is much higher than that of nitric oxide or acetylcholine. Many are multi-ring aromatics. Those of the adrenal cortex are derived from cholesterol. Others are peptides with typical molecular weights of 30,000. This complexity suggests a different mechanism of production than for the paracrines, at least for the peptides. These relationships are discussed in detail in **Section 16.3**.

The literature suggests these agents are formed within the neuroaffector neurons and released by excretion, probably like the excretion of the peptide opsin by the visual sensory neurons.

The release of chemicals by the axon of a stage 7 neuron can hardly be associated with a synapse. The mechanisms and dimensions involved are significantly different.

2.7.2.1 The amino acids as progenitors of many hormones

Many of the most important hormones are derived from simple amino acids, frequently by decarboxylation and the addition of one or more hydroxyl groups. The resulting chemicals are no longer peptides. They are used as they stand without being incorporated into longer peptides. They are frequently found as pericrine hormones within the CNS, some of these potentially released by the hypothalamus to influence the hypophysis.

Chapter 16 will explore and provide a framework for the hormones released by the neuroaffectors in greater detail.

2.7.3 The exocrine stage 7 neuroaffector neurons

The exocrine neuroaffectors operate essentially as do the endocrine neuroaffectors. Their operation will be discussed mor fully in **Chapter 16**.

2.7.4 The hybrid cardiocyte of the cardiac system

The hybrid cardiocytes of the cardiac system incorporate the capabilities of a neuron and a myocyte in a single biological cell. These cardiocytes will be placed in a class by themselves, stage 8 hybrid neurons within the neural system. **Chapter 20**will discuss the characteristics of the cardiocytes in detail within the context of the cardiac system as a distinct mini-neural system (not just as a mini- brain). Considerable controversy remains within the cardiocyte academic arena, partly because the functional properties of the cardiocytes have not been clearly documented. **Chapter 20** shows clearly that the neural portions of the cardiocytes receive electrolytic signals and pass those signals along by electrolytic means. The signals are analog in character as demonstrated by the *interval-duration relationship* so well known within clinical medicine. Being analog neurons, they share many properties with the stage 2, 4, 5 & 6 neurons. In achieving this interval-duration relationship, the major cardiocytes associated with contraction of the cardiac muscle appear to act as an over-driven analog amplifiers. As a result the interval-duration relationship provides an extra degree of cardiac muscle performance under conditions of stress (such as very high pulse rates) without the danger of encountering a tetanus. Unlike the stage 2, 4, 5 & 6 neurons, the stage 8 neurons appear to require a separate positive potential power supply. This power supply insures a positive poditic potential that in turn, insures the quiescent axon potential of the neuron can be very close to zero relative to the surrounding matrix. This appears to be a critical value in controlling the release of calcium ions from the sarcoplasmic reticulum and the subsequent stimulation of the sarcomeres.

The both the electrolytic and histological forms of the schematic of a cardiocyte are shown in

Figure 2.7.4-1 The details of these circuits will be discussed in **Section 20.3.5**. As noted in Frame A, the electrolytic potential of the axoplasm is used to stimulate the orthodromic cardiocyte and also stimulate the release of calcium ions from the sarcoplasmic reticulum. this release is conceptually similar to that performed by other stage 7 neurons but no definitive mechanism has been found in the literature. Frame B shows the poditic power supply as well as the axonal power supply.

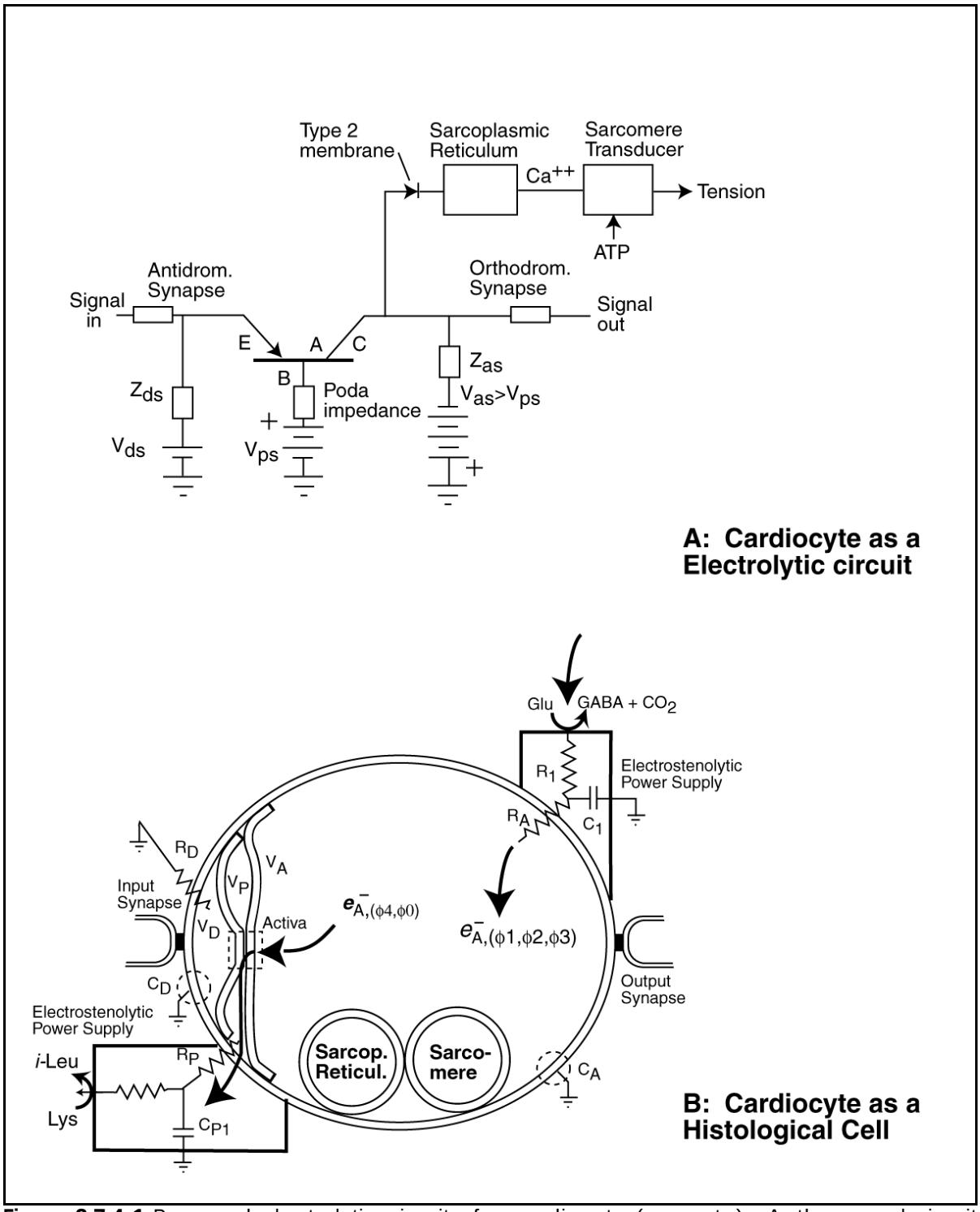

Figure 2.7.4-1 Proposed electrolytic circuit of a cardiocyte (myocyte). A; the neural circuit controlling the sarcomere as the chemical energy to mechanical energy (tension) transducer. The role of the sarcoplasmic reticulum remains open to question. B; the histological representation of the same circuit showing an end-on view of the cardiocyte. The lower left power supply converts lysine to iso-leucine and creates a nominal +52 mV. See text.

2.7.4.1 The functional properties of the cardiocyte

The cardiocytes are hybrid cells, exhibiting significant electrical parameters within the family based on their roles as both control system sources and inter neuron. The interneurons in particular exhibit an operating characteristic not found in other neurons. They operate in the analog (not phasic) mode but are over-driven, by signals of greater amplitude than their input dynamic range. The interneurons simultaneously exhibit significant characteristic as electrical-to-mechanical transducers. These properties lead to describing them as stage 8 neurons. These unique properties of the cardiocytes will be addressed in **Chapter 20**.

2.7.4.1.1 The electrical characteristics of the cardiocytes

Figure 2.7.4-2 shows the electrical operating characteristic of the cardiocyte as a neuron. The first feature to note is the cardiocyte operates differently when stimulated by a single pulse or widely spaced pulses. This is a pathological case for a cardiocyte. Under this condition, the base terminal of the Activa is near the positive podaplasm supply potential of +52 mV. The quiescent potential of the axoplasm is near –85 mV. If stimulated by a pulse of saturating amplitude , the axoplasm potential will traverse from –85 mV to a +35 mV for a short interval before dropping to about 0.0 mV during the remainder of the stimulation (due to charging of the podalemma acting as a capacitor).

At higher stimulation pulse rates, the podaplasm potential remains close to +20 mV throughout the series of pulses and the output signal goes from the quiescent value of –85 mV to near zero mV during each pulse cycle (using the dynamic curves).. These different pulse shapes are shown in the lower frame. The peaked response is seen to be a pathological condition. The normal, and *in-vivo*, cardiocyte operation is the smoother (solid line) waveform. These two waveforms bound the variety of waveforms reported in the literature for cardiocytes (**Section 20.3**).

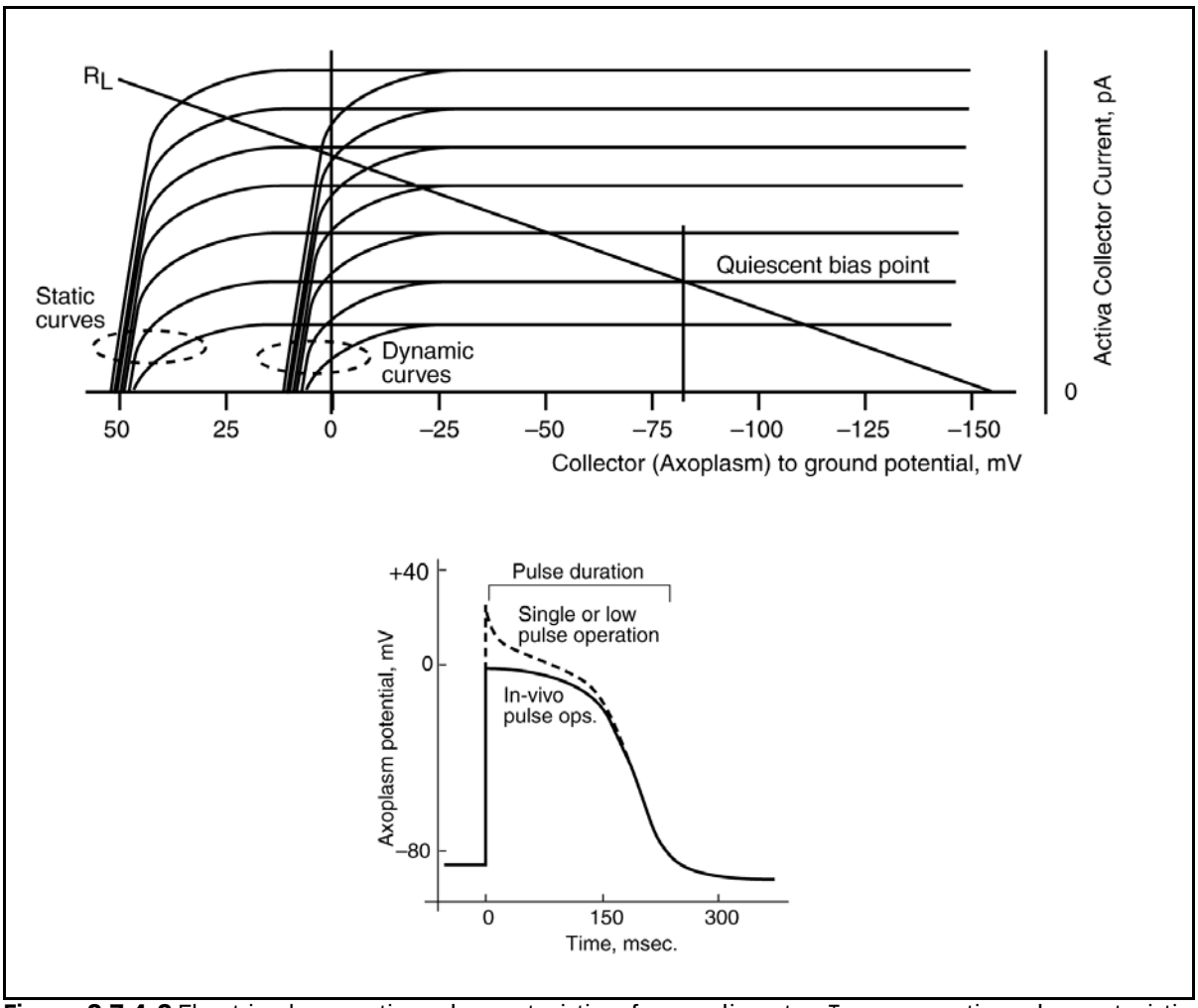

Figure 2.7.4-2 Electrical operating characteristic of a cardiocyte. Top; operating characteristic of the cardiocyte showing both the static and dynamic position of the collector current to voltage characteristics. The base potential of the Activa falls below the positive potential of the poditic power supply under dynamic conditions. Bottom; the two bounding waveforms of the cardiocyte temporal response. The peaked (dashed) response is due to a pathological condition, an abnormally low pulse rate, or single pulse stimulation of a cardiocyte *in-vitro* (corresponding to the static condition above). The more rounded (solid) response is the nominal, *in-vivo*, condition or that encountered *in-vitro* with normal stimulation pulse rates for the species (corresponding to the dynamic condition above).

The pulse duration is determined by a combination of the length of the stimulation over-driving the cardiocyte, and the relaxation time constant of the axonal circuit of the Activa–as recognized in the *Interval-Duration Phenomenon*.. Over-driving alone tends to broaden the width of the output waveform.

2.7.5 Special case of the giant (swimming) neuron (not axon) of squid

[xxx expand]
The giant neuron of the squid, *Loligo*, is a stage 6 signal manipulation neuron and not a stage 3 signal projection neuron. As such it does not produce action potentials. It exhibits a series of pickoff points along its axon. These pickoff points are pedicles that send signals with different delays to the individual stage 7 affector neurons driving the swim muscles. It produces a unique

pulse signal of variable velocity along the length of the axon appropriate to the swim speed desired. The velocity of the signals along the axon appear to be varied by adjusting the properties of the multiple neurons enclosing the giant axon like a sheath. The result is a change in the shunt capacitance between the giant axon and the neural matrix. The velocity of signal diffusion is controlled by this capacitance.

The stage 6 locomotion (swim) neuron is found within the mollusc phyla, and possibly the reptiles and fish; however it has not been reported among mammalian species. It is reasonable to expect some of the marine mammals may have developed a substitute for this type of neuron.

2.7.6 The special case of the eccentric cell of Limulus

The visual system of *Limulus* exhibits many transitional features along the evolutionary trail. In particular, the system appears to be a transitionary form between *Arthropoda* and *Mollusca*. While its eyes employ ommatidia and cartridges contained therein very similar to Arthropoda, they differ in having one or more of the cells that have been replaced or modified to generate action potentials. As discussed elsewhere, either bipolar or lateral cells can be caused to oscillate by adding capacitance to their collector (axon) circuit. This capacitance can be introduced by increasing the surface area of the axon, either by increasing the volume or the overall length of the axon beyond a critical value. This appears to be the case for the so-called eccentric cell. This type of cell is addressed in the Author's book on vision[111]. There appear to be two forms of eccentric cells. The first type contains a driven monopulse oscillator that produces action potentials on demand, as characteristically found in ganglion cells transmitting monopolar signals derived from luminance information. The second type contains a free-running oscillator that produces action potentials with a frequency proportional to the level of the bipolar stimulus, as characteristically found in ganglion cells transmitting bipolar signals derived from polarization or chrominance information. No references to this cell type was found outside of the *Limulus* literature.

2.8 Other important features of neurons and neural paths EMPTY

Several important features of neural architecture have not been addressed in previous sections. The same is true of certain morphological features of individual neurons. These features are addressed here for completeness. In some cases, references to other sections developing these ideas in greater detail are provided.

2.8.1 Merging and bifurcating signal paths

The above discussion provides a variety of tools that can be used to discuss the merging and bifurcation of signal paths. Where the merging or bifurcation only employs a synapse, no regeneration is involved. The action of the circuit relies upon the following circuit elements. Alternately, if a hybrid neuron is used as the core of the merging or bifurcation process, several situations are possible. Complete description of all of the options available in both the analog and pulse domain is not called for here.

The literature suggests that all of the presynaptic axoplasms associated with the merging of signals can be represented by a voltage source. This appears to be true in both the analog and pulse domains.

2.8.1.1 Merging and bifurcation in the analog signal domain

The merging of the signals from two or more axoplasms via synapses into a single neuroplasm is primarily a matter of the impedance of the individual synapses relative to the input impedance of the Activa in the post synapse circuit. In the analog domain, the result is straight forward and amounts to a summation or a differencing of signals as indicated above. In the case of bifurcation, the situation is similar. If the output of the presynaptic axoplasm is of low

[111]Fulton, J. (2005) Processes in Biological Vision. www.neuronresearch.net/vision Chapter 14, Section 14.6

impedance, it can act as a voltage source and support any reasonable number of synapses without introducing crosstalk due to circuit loading.

2.8.1.2 Merging and bifurcation in the pulse signal domain

In the pulse domain, the merging of the signals from two or more axoplasms via synapses into a single neuroplasm can be as simple as the analog case. However, there are more options. The options vary with a variety of circuit element impedances and ratios of impedances. They also depend on the refractory state of the subsequent action potential generator or regenerator. In the simplest case, the two pulse streams would merely be merged. The merged pulse streams would then be regenerated by the next Node of Ranvier. This would result in a single pulse stream. However, if the following regeneration circuit exhibits a significant refractory period, the pulse train might be significantly distorted. It is not clear what significance this option would have from an information theory perspective. In a second option, the two pulse streams could be decoded in a post synaptic hybrid neuron circuit, either summed or differenced and a new pulse stream generated. This pulse stream would appear orderly and could represent the difference between two signaling channels. This appears to be the situation, with possibly additional signal manipulation, that happens in the LGN and the Pretectum of the mid-brain before the signals are sent on to the cortex. A third option would be where the two pulse streams are applied to two input terminals of a projection neuron without decoding. In this case, the output would be strongly influenced by the refractory period of the projection neuron. The output pulse stream would be subject to significant distortion, including what might be called inhibition. The integrity of the information content of such a pulse stream would be questionable.

2.8.2 Relationship of nuclei to conduits and sheaths

As indicated earlier, while the neuron is considered the fundamental morphological unit of the neural system, it is not the fundamental functional element of the neural system. The fundamental functional structure is a series of interdigitated conduits and active electrolytic semiconducting devices. The nuclei and supporting metabolic elements of a cell are able to support a variable number of conduits and active devices based on topographic considerations. The presence of multiple Nodes of Ranvier is the quintessential example of this situation. Thus, the number of neurons is not directly related to the number of functional units in the neural system.

The method of providing myelin wrapping to a (generally axonal) conduit also differs from a one-to-one relationship. The terminology is also somewhat convoluted in this area. In the peripheral nervous system, the myelin is provided by Schwann cells. In the CNS, it is provided by oligodendroglia cells. The difference between these two cell types may be significant. It appears an individual Schwann cell only forms myelin around one axon segment; whereas, an individual oligodendroglia may provides multiple myelin segments that enclose multiple axon segment of distinctly different neurons. Figure 5.2 in Matthews[112] and the comments of Afifi & Bergman[113] are consistent with this description of the Schwann cells.

2.8.3 Biasing and the non-uniformity of axoplasm potential

The previous discussion has not concentrated on the precise voltage of the plasma within a given conduit when discussing the biasing of the Activa for two reasons. First, the precision required in specifying these potentials is not supported by the literature. A change of only a few millivolts can be significant when the average potential difference is less than 100 millivolts. Second, there is a difference in potential between the two ends of most conduits. Although the plasma does not exhibit a significant dissipative resistance, it does exhibit a significant time delay in the propagation of a potential from one end to the other. Thus, the two ends of a plasma are

---

[112]Matthews, G. (1991) Cellular physiology of nerve and muscle. Boston, MA: Blackwell Scientific Publications. pg. 61

[113]Afifi, A. & Bergman, R. (1998) Functional neuroanatomy. NY: McGraw-Hill pg. 19

typically at different average potentials. This allows the bias voltage applied to an Activa at one end of a conduit to be different from the bias voltage applied to an Activa at the other end.

To specify the actual quiescent bias levels of each node of a multi-stage direct coupled electrolytic circuit requires considerable precision and very careful measurement.

2.8.4 Confirmation of the physical circuit and analytical models

Two papers by Schwarz and colleagues provide excellent support for the physical and analytical models of this work. Unfortunately they use the euphemism, Na current, to represent the discharge current through the collector-poditic circuit of the Activa. They also identified voltage dependent potassium currents as euphemisms for the recharging current passing through the collector impedance of the axon.

They also attempted to fit a simple exponential decay equation to the decay portion of their action potentials and generator potentials. Their difficulty is explained by the more appropriate models and equations of this work.

The 1987 paper of Schwarz, Reid & Bostok & Eikhof[114] provides a remarkable set of figures confirming the models of the neuron developed in this chapter apply to a variety of neurons in the rat. Figure 1 shows action potentials including their pre-threshold portion in excellent agreement with the predicted values as a function of temperature. Figure 2 shows the non-oscillatory current responses (equivalent to generator potentials) in response to long voltage pulses. The waveforms exhibit distinctly different leading and trailing edge time constants except for the Hodgkin Condition where the overall waveform corresponds to the Poisson Equation of the 2nd kind. All of the waveforms are as predicted by the excitation/de-excitation equation (**Eq. 2.5.3-1** of **Section 2.5.3.5**). Figure 3 shows the static current versus voltage characteristic for one of their neurons for both the zero poditic impedance condition and the finite poditic impedance condition. It is equivalent to [**Figure 2.3.3-2** of this work.

The 1995 paper of Schwarz, Reid & Bostok[115] provides a remarkable set of figures confirming the models of the neuron developed in this chapter apply to the human Node of Ranvier. Their figure 2(C) provides a static current versus voltage characteristic for the analog neuron with and without feedback in the poditic circuit path. The figure is virtually identical to that of [**Figure 2.3.3-2** in **Section 2.3.3** developed based on first principles and well accepted semiconductor physics practice.

Their figure 2(B) illustrates the response of a real neuron to parametric stimulation in the absence of significant impedance in the poditic circuit path. The waveforms of (a) are precisely as developed using the closed form analytic equations of **Section 2.5.3.5** for a temperature of 20C.

Their figure 2(A) shows their measured action potential (including the pre-threshold portion) resulting from the monopulse oscillation of their neuron. The figure is in excellent agreement with the same characteristic developed from first principles in **Section 2.6.1.1**.
xxx may need to quote other chapters for these graphs.

All of the Schwars and colleagues data, and most of the other data cited above was obtained by electrolytic stimulation via patch clamp experiments. ***This fact demonstrates that the neural system can operate entirely independent of any chemical reactions other than those associated with generating the electrical power to drive the neuron(s).*** Although they use the Na current euphemism, they did not in fact observe any currents identifiable as based on Na ions.

2.8.4.1 Confirmation of the switching characteristic of the oscillating neuron

---

[114]Schwarz, J. & Eikhof, G. (1987) Na currents and action potentials in rat myelinated nerve fibres at 20 and 37 C. Pflugers Archive--European Journal of Physiology. vol. 409, pp. 569-577

[115]Schwarz, J. Reid, G. & Bostock, H. (1995) Potentials and membrane currents in the human node of Ranvier *Eur J Physiol* vol 430, pp 283-292

The use of the binary switching functions, h, m & n in the unsolved partial differential equations developed by Hodgkin & Huxley, and used by most subsequent modelers, introduce switching points that are not otherwise identified in their numerical integrations. These switching points are the same as those defined by explicit events in the Electrolytic model of the neuron.

2.8.5 Specialized regions of outer lemma of a neuron

Multiple special areas of the outer lemma of neurons are recognized. These support the receptor function of sensory receptors, the electrostenolytic function providing electrical power to all neurons (and potentiation of all biological cells in general), and the formation of both the upstream and downstream portions of synapses and Nodes of Ranvier. From the perspective of neuroanatomy, these regions have frequently been described as rafts on the lipid surface of the outer bilayer of lemma[116]. At the conference, the cited article arrived at a consensus definition of a raft as,

> "Membrane rafts are small (10–200 nm), heterogeneous, highly dynamic, sterol- and sphingolipid-enriched domains that compartmentalize cellular processes." The report went on, "This definition was arrived at by listing all possible terms that could be used to describe lipid rafts, discussing and prioritizing them, and then working them into a definition for these domains. The terms that did not make it into the definition are at least as revealing of the state of the field as are the terms that did make the final cut. The definition is intended to apply specifically to micro-domains in cells, not in model membranes, which are thought to be governed by a different, but overlapping, set of rules." The classes of lipids named in the definition can now be extended to include a variety of phospholipids esterifiec with a variety of amino acids in support of the reception function of sensory neurons and electrostenolytics.

The paper provides an excellent view of the problems a committee of scientists face when trying to arrive at a consensus.

Neishabouri & Faisal discussed salutatory conduction with respect to their concept of lipid rafts[117]. Their conceptual framework is limited in they do not differentiate between analog type generator potentials and pulse type action potentials, grouping them as action potentials. They even quote Hodgkin and Huxley, 1952, who made a similar mistake, as a principle source of information. They note, "Saltatory conduction(Huxley and Stämpfli,1949; Fitzhugh,1962) in myelinated axons refers to the rapid propagation of the electrical waveform from each node to the next (the AP seems to jump between nodes)." Clearly, they do not understand how the action potential is propagated from one node to the next. See **Sections 9.1.1** & **9.1.2**. The Introduction to their paper includes an inordinately high number of equivocating adjectives and verbs.

They define a variety of cellular surface features such as "C-fibers are very thin unmyelinated peripheral axons responsible for transmitting nociceptive pain sensations. A variety of Na+ channels are found on the membrane of C-fibers, including TTX-sensitive Nav1.6 and Nav1.7 channels." Their focus appears to be on the proposed sodium channels of Hodgkin & Huxley, even though such channels have not been identified to date, even with the advent of atomic force microscopy (AFM) in recent years.

Their effort focused on computational modeling, "We investigated the effects of the lipid-raft clustering of Na^+ channels on the function of neural fibers, using both deterministic and stochastic simulations. In stochastic simulations, the changes of conformations of ion channels were individually modeled." Their modeling resulted in an unusual finding. They predict action

---

[116]Pike, L. (2006) Rafts defined: a report on the Keystone symposium on lipid rafts and cell function J Lipid Res volume 47, pp 1597-1598

[117]Neishabouri, A. & Faisal, A. (2014) Saltatory conduction in unmyelinated axons: clustering of Na+ channels on lipid rafts enables micro-saltatory conduction in C-fibers *Front Neuroanat* 10 pages, | http://dx.doi.org/10.3389/fnana.2014.00109

potentials of different temporal and physical characteristics depending on their location, ostensibly as a metabolic energy saving feature. They do note some difficulties with their protocol, "Due to their very small diameter, it is extremely difficult to obtain intracellular data from C-fibers, and therefore we can only estimate the propagation velocity in these fibers using extra cellular recordings (Tigerholmetal.,2014). These estimations can not be reliably linked to axonal diameter. C-fiber axons are known for their very low conduction velocities. The conduction velocity is estimated to be 69cms-1 for a 0.25μm diameter axon."

Many of their simulated and recorded action potentials are actually generator potentials based on the distinctive features found in the E/D responses and equations of this work, particularly the variable temporal period of the waveforms with excitation. Recognizing their action potential are frequently actually generator potentials (see the "recorded AP" in their figure 2), their assertion, "Because there is no myelin sheath around C-fiber axons, the membrane capacitance and leak conductance are too high for Na^+ clusters to be placed at distances on the order of the axon's length constant($\Lambda \approx 200$μm). In our simulations, the maximum distance L_{max} between lipid rafts which allowed action potential [actually a generator potential] propagation was ~20μm." appears totally appropriate. They close with the equally rational statement, "This is in stark contrast with myelinated axons, where the myelin sheath lowers the capacitance and leak conductance of the membrane. As a result, nodes of Ranvier can be placed much further apart."

The contribution of the Neishabouri & Faisal paper to the understanding of the almost totally deterministic features of the neural system is minimal.

2.9 Mathematical and computer modeling of neurons

The present state of mathematical and computer (numerical) modeling of neurons is unsatisfactory. All modeling found in the literature prior to 21012 has attempted to model the very early conceptual descriptions of a neuron by Hodgkin & Huxley based on examination *in-vitro* of a parametrically stimulated and highly mutilated neuron from a species of *Mollusca*. Such modeling has not recognized the special class of the so-called giant axon of the locomotion neuron explored by Hodgkin & Huxley.

2.9.1 Modeling difficulties up to the current day

Carnevale & Hines have provided an excellent discussion on "Why model?" They note, "In order to achieve the ultimate goal of understanding how nervous systems work, it will be necessary to know many different kinds of information" related to the anatomy, pharmacology, biochemistry and many related sciences. They develop the complexities involved in describing the mechanisms involved and the features of signaling and one paragraph and then go on to assert, "Hypotheses about these signals and mechanism, and how nervous system function emerges from their operation, cannot be evaluated by intuition alone, but require empirically based modeling." They use a simpler version of **Figure 2.9.1-1** to address "Just what is involved in creating a . . . model of a physical system?" There are several approaches including physical circuit modeling, analytical modeling and numerical modeling. Based on a two-terminal neuron evolving from Hodgkin and Huxley (H&H), there has not been adequate knowledge of the neuron to allow realistic physical circuit modeling. Similarly relying on the equations developed by H&H during their exploratory investigations of 60 years ago has not led to adequate analytical or computational models. Recent analytical and computational models have frequently not examined whether the equations of H&H even address the generic neuron or are only an attempt to describe a specific type of neuron. Thus the notation in the figure. It is necessary that the modeler strain to understand what is actually known about his subject and only then attempt to simplify his conceptual model (hopefully by stating a clear null hypothesis he intends to explore). Once a clear null hypothesis is established, it is important to be faithful to the Scientific Method when evaluating the physical, analytical, computational or other model of the system.

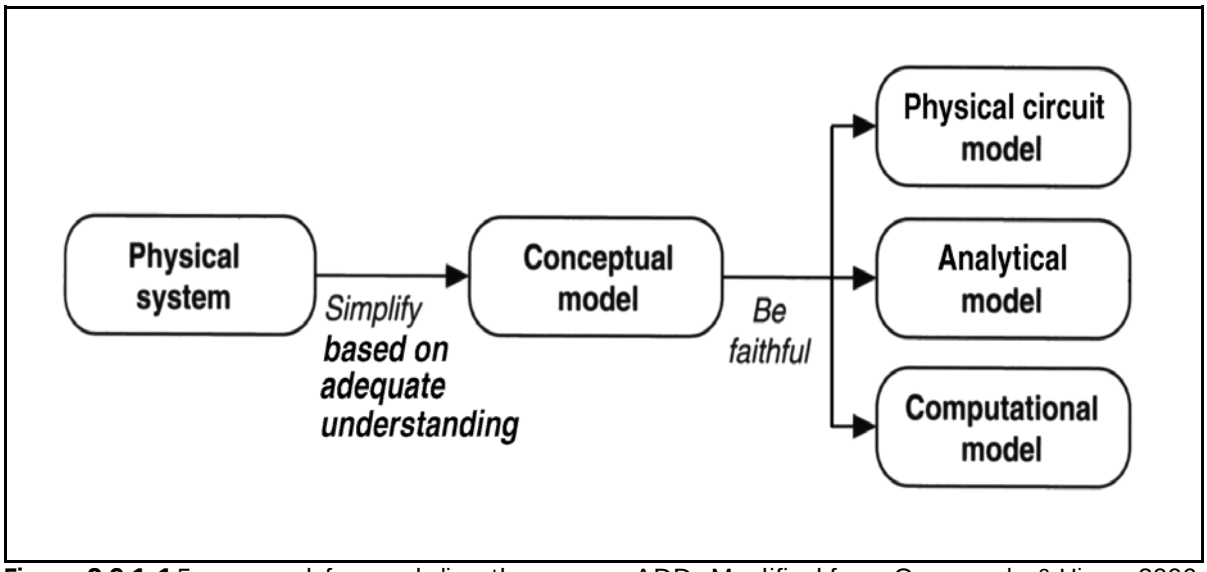

Figure 2.9.1-1 Framework for modeling the neuron ADD. Modified from Carnevale & Hines, 2006.

During the 1950's, the label action potential was not clearly defined. It was frequently applied to any pulse-like response to almost any stimulation. This included the stimulation of a stage 1 signal generating neuron in response to a short pulse as well as a stage 3 Node of Ranvier regenerating a pulse designed to be identical in shape to the action potential exciting it. The former is not identified as an analog waveform describing the excitation/de-excitation mechanism intrinsic to the sensory neurons only. The latter is now identified with the encoding and regenerating pulse neurons of stage 3. These waveforms arise from substantially different mechanisms in substantially differently configured neurons.

The waveforms reported by Hodgkin & Huxley clearly reflect the above problem with definitions. The neuron they studies was of a special class generally described as a locomotion waveform generator. It is neither a stage 1 signal generating neuron nor a stage 3 signal projection neuron (with a requisite myelinated axon). It is in fact a modified stage 6 command generation neuron implemented as a tapped analog delay line. As such, it does not generate action potentials. The responses H&H recorded were actually parametrically stimulated analog waveforms after the removal of all neuritic tissue to the best of their ability.

2.9.1.1 Major problems with the McCulloch & Pitts mathematical neuron

As recently as 2007, Baars & Gage have published an introductory textbook on neuroscience that includes no material on the operation of the fundamental neuron and presents a conventional model of the neuron in Appendix A that was used in forming simple networks (that failed so badly during the artificial intelligence (AI) fervor of the 1990's. **They focused on the McCulloch & Pitts model of 1943** and noted McCulloch was a physician and Pitts was a self-taught logician. This model illustrates the basic flaw that has hampered neural research ever since that time. It treats the neuron as a two-port digital input/digital output summing device as shown in **Figure 2.9.1-2(A)**. In their model, X_n were all digital signals of either 0 or 1. W_n were scalar weighting factors between 0 and 1.0 or 0 and –1.0. There was a thresholding function, θ, within their neuron that created a signal of +1 whenever A exceeded a threshold level. Otherwise the output remained at 0.

The situation in 1943 involves many difficulties when viewed from a modern perspective;

• Neither McCullock or Pitts had any training in electronics or electrophysiology.
• The age of the digital computer had not yet dawned (Turing was only conceiving it in England under highly secret circumstances.
• Feedback theory as it applies to oscillators was in its infancy (The Radiation Laboratory of MIT down the street from their laboratory was developing the theory at that time under highly secret

conditions.
• Hodgkin & Huxley had not published their electrophysiology data on the neuron (They were working in London at the same time under wartime conditions.
• The invention of the transistor at Bell Laboratories was five years in the future.
• The critical role of myelination in the operation of stage 3 neurons was totally unknown.
• McCulloch & Pitts were unaware that over 90% of the neurons did not generate action potentials.
• McCullock & Pitts were unaware the neural system was asynchronous and used return to zero (RZ) pulse coding rather than binary coding.

As a result, the McCulloch & Pitts model is that of a binary logic unit but ***not*** that of a fundamental (analog) neuron or its extended RZ pulse forming variant. As a model of a neuron, the McCulloch & Pitts model is totally falsifiable in the (translated) language of Popper. The mathematical example on pages 456-457 of Baars & Gage has no relevance to a real neuron. In fact, *their artist's impression of a neuron on page 455 requires expansion to show a bilateral dendritic tree if they are to address the general case.* The material on pages 457-459 related to "Learning in a Neuron" is total conjecture on the part of the author's. The example they give may apply to a logic unit with many arbitrarily adjustable parameters but it is irrelevant to neuron operation.

> Recall, Baars & Gage limited their textbook to the exploration of pulse neurons (page 60), thereby overlooking more than 90% of the actual neurons of the neural system.

Baars & Gage dropped the entire Appendix A written by Aleksander, including all references to the McCulloch & Pitts model of 1943, from their 2010 edition. They also dropped the simplified neuron presented by Aleksander without citation. It is expected this was done to allow more modern views relating to the neuron to be presented in the main text. On page 65 of the 2010 edition, Baars & Gage present a neuron (page 65) from Byrne & Roberts of 2004 that is more elaborate but continues to follow their stated objective (page 64) "to focus only on an integrate and fire neuron."

2.9.1.2 An alternate realistic model of the mathematical neuron

Baars, writing in Baars & Gage, has made a major statement that is best introduced by an allegory;

> The academic neuorscience community has just placed its toe in the waters of real neuroscience when Baars noted (page 62, 2007), "It is now known that electrical synapses, which use no neurotransmitter al all, are much more common than was previously believed. Even the dendrites of a single nerve cell may be able to compute useful information. . . Other surprises keep coming."
>
> As a matter of fact, virtually all synapses (greater than 95%) are electrolytic (the precise form of electronic) synapses. Furthermore they are three-terminal electrolytic devices (like the Activa within the neuron) that are sometimes wired to emulate an active diode (a two-terminal device). And, the role of the "neurotransmitters" glutamic acid and GABA is to power the neuron or synapse. They act as neuro-facilatator and neuro-inhibitor respectively.
>
> Although Baars reverts nearly instantly to the common wisdom, his including the above statement shows the winds are changing.
>
> This paragraph will be repeated and expanded upon in Section 2.4 on the synapse.

This work is based entirely on the electrolytic neuron paradigm. It is proposed that the neural system is fundamentally an electrolytic system and that inter-neuron signaling is by electrical means. Only in the case of paracrine, endocrine and exocrine signaling are chemical signaling important. These activities are found at the termini of the neural system. Furthermore, the neuron within the neural system contains a biological equivalent of a transistor (an Activa) and is fundamentally an analog device.

Figure 2.9.1-2(B) shows two variants of a more realistic model of the fundamental neuron. It is a three-terminal device with a bi-stratified input structure consisting of the well known dendritic tree (typically the apical tree) and the less well known poditic tree (typically the circumferential tree), and a well known axon output structure (a single long structure bifurcating a few times near its terminus). Depending on the requirements on the neuron, either the dendritic tree or the poditic tree may be minimized morphologically, but its presence is easily recognized by plotting the electrolytic potentials of the fluid surrounding the neuron. Similarly, the axon need not extend outside of the soma of the real neuron but its presence is easily demonstrated by recording the electrical potentials of the fluid surrounding the neuron.

Whereas in (**A**) the values for W_n are scalar values, in the real neural circuit, as well as the model in (**B**), the values for Z_n are complex numbers describing transfer function of a filter circuit between the synapse and the summation terminal of the neuron. In (**A**) the threshold, theta, is set by an unknown mechanism (Aleksander, writing in Baars & Gage, suggest it is set by some sort of iterative learning process of unknown mechanism to this day). In (**B, right**) the threshold, theta, is set by the fixed bias applied to the dendrite to podite potential (V_{dp}) described in detail in following sections of this work. Z_{fb} is the feedback impedance from the axon to the dendritic terminal of the internal Activa (the biological transistor described in detail below). This impedance has a complex value involving significant phase shift.

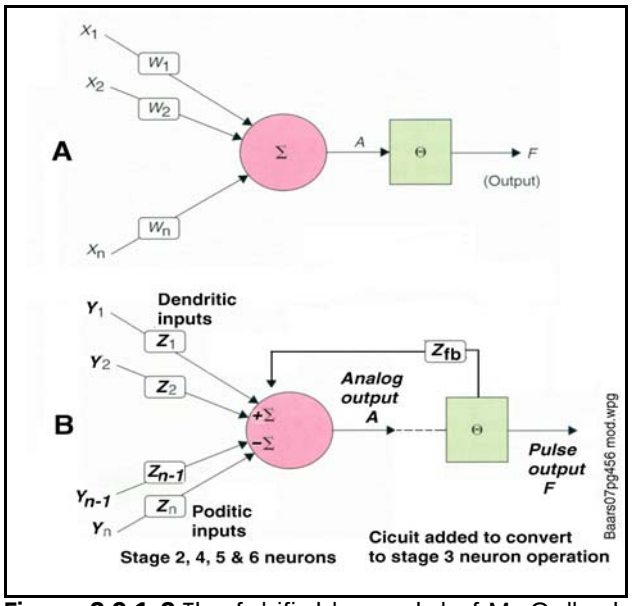

Figure 2.9.1-2 The falsifiable model of McCulloch & Pitts (A) vs a realistic model (B) of two neuron configurations. Theta has a different meaning in the two frames and an external feedback path is not actually used in physical neurons. See text. Modified from Baars & Gage, 2007.

The circuit on the left in (**B**) represents the nominal neuron (greater than 90% of the population) generating an analog output as the result of multiple analog inputs (where all Y_n are positive-going signals). The output is a biphasic analog signal resulting from the algebraic summation shown multiplied by an amplification factor (typically varying from less than one to about 200:1 depending on the application). The analog output has the same phase as the signal applied to the dendritic input.

The same fundamental model on the left in (**B**) can be converted to a stage 3 neuron by the application of a feedback mechanism as shown on the right. By setting the value of Z_{fb} and the bias voltage, V_{dp}, at the time of morphogenesis, the RZ pulse generating performance of the stage 3 neuron is determined. For pedagogical purposes, Zfb is shown in an external feedback path to the dendritic input which does not actually exist. This representation has caused difficulties in the laboratory because naive investigators have sought endlessly to locate the feedback path. *The feedback is achieved by an internal path not subject to isolation in the laboratory*. Its performance is easily demonstrated by means of the transfer function of the complete circuit (**Section 2.6.2**).

The initial treatment of the morphogenesis of the neuron will necessarily be relatively conceptual. The morphogenesis of the complete neuron is beyond the scope of this work. However, there appears to be little argument as to how neurons are formed. This chapter relies upon the characteristics of the biological lemma developed in **Chapter 1**. See Section 3.1.5 of "Processes in Hearing: A 21st Century Paradigm" by this author for additional discussion.

The simple neural models in (**B**) can be definitized to any degree required using the models of

transistor action applied to man-made transistors introduced in **Section 2.2.3**. With the acceptance of a three-terminal neuron as discussed in this chapter, there is no reason for mathematical modelers to use curve fitting techniques applied to the conceptual curves presented by Hodgkin and Huxley and elaborated upon by many later modelers.

2.9.2 Major problems with subsequent mathematical neurons

Efforts to model the biological neuron effectively have taken drastically different paths over the years. Some have attempted to expand on the totally mathematical approach of McCulloch & Pitts introduced above. Others have proceeded to frame their models on the empirically based work of Hodgkin & Huxley from the same time period. These models have generally adopted the (unsolved) differential equations of H&H, expanded them in various ways to make them more tractable and then continued to solve the expanded equations by numerical integration.

These models have invariably accepted the two-terminal model of the neuron presented by H&H in their extensive reports and conjectures of 1952[118]. The two-terminal chemical model is untenable in competition with the three-terminal electrolytic model

2.9.2.1 Analytical models spanning the last 60 years

Within the mathematical community, little attention has been paid to the evolution of separate and more detailed definitions of the generator potential and action potential subsequent to the work of H&H. The short comings of the H&H equations have been long recognized in the analytical modeling community. However, by continuing to consider the two-terminal model of the neuron circuit, little real progress has been made. A significant problem is the dimensional order of the subsequent models. They vary from fewer dimensions than H&H to a considerably larger number of dimensions, all generally following an exploratory approach. Byrne & Roberts (page 192) summarized the various analytical approaches in more detail than here.

One of the earliest was the FitzHugh-Nagumo model of the 1960's. This model made no claim to quantitative relevance and adopted a generic cubic equation as an initial function from which the results of H&H could be fitted. The variable in this cubic was defined as the membrane potential of a two-terminal neuron.

During the 1970's and 1980's, the Morris-Lecar qualitative model appeared. It differed little from the fundamental H&H equations but made a series of different assumptions. These assumptions suggested different mathematical manipulations and led to the possibility of a Hopf bifurcation as a mechanism of action potential generation. This model remains a subject of study, however, it does not address many of the fundamental properties of the real neuron such as their temperature sensitivity, the sensitivity of the shape of the action potential to the amplitude of the stimulus or the delay associated with the stimulus amplitude and temperature.

The Hindmarsh–Rose model of the 1980's was similar to the FitzHugh-Nagumo model and was ostensibly derived from first principles (although these were not stated to this author's satisfaction). They began with a cubic equation of somewhat more general form involving two (unsolved) differential equations and about ten arbitrary constants. This number of arbitrary constants should allow a cubic equation to fit almost any arbitrary waveform. This model has more recently been expanded into a "three-dimensional model."

None of these analytical models are in fact representative of the general equations and waveforms of H&H. They at best attempt to fit the degenerate form of the H&H equations defined here as the Hodgkin Condition, i.e., the Poisson Equation of the 2nd kind, without any terms relating directly to the temperature of the specimen, or addressing the ability of the apical and basilar neurites to perform differentially with respect to each other, including suppressing the generation of all action potentials.

---

[118]Hodgkin, A. Huxley, A. & Katz, B. (1952) Measurement of current-voltage relations in the membrane of the giant axon of *Loligo*. *J. Physiol*. vol 116, pp. 424-448

Any model of the neuron that does not recognize the effect of temperature on the operation of the neuron, such as illustrated in [Figure 2.6.1-1 above from Schwarz & Eikhof, should be discarded as an unrealistic model of the physical system.

2.9.3 The NEURON– a computational model with mixed roots

A computer program with a GUI (graphical user interface) and its own tailored programming language (hoc, pronounced hoak) has evolved from the Moore Laboratory at Duke beginning around 1975 and continued by Hines and colleagues at Yale[119]. It has achieved a prominent place in pedagogy, been used considerably in pre-doctoral research and been documented in considerable detail in a text in 2006[120]. While very clearly described from a mathematical modeling perspective, it does not address the complete biological neuron. The associated modeling of the synapse based on a cartoon (page 273) is extremely simple.
- - - -

NEURON continues to rely upon the very early interpretation of the neuron from the 1940's up to 1952 by Hodgkin, Huxley and several colleagues. It is built around a core (kernal) based on what is described as the alpha function (a Poisson Equation of the 2nd kind) that Hodgkin, Huxley & Katz (H&H) attempted to use to explain their exploratory investigations on the large axon of the squid, *Loligo*). Hodgkin's efforts to apply this equation were of very limited success because of its limited flexibility of this equation.

NEURON does not specifically describe the physiology of the neuron they are proposing to model but follow the common approach of attempting to solve the unsolved set of simple differential equations of H&H using numerical methods.

The guide provided by Carnevale & Hines, the major curators of NEURON, includes virtually nothing on the physiology of the neuron and is focused on the mechanics of using their GUI interface. The guide is supported by two more detailed papers[121,122]. The papers are focused on the topology of the computer program itself. While citing a variety of sources, the papers basically follow the RC cable models of Rall applied to both the neuritic and axonal structures and the alpha function attributed to H&H (that contains no delay or temperature parameters and does not recognize the presence of inductance associated with the axon). Its solution of the General Wave Equation is limited to the diffusion equation of Kelvin. No discussion is provided concerning the more recent delineation of the poorly defined action potential of H&H into two distinct waveforms, the generator potential associated with the great majority of neurons (~95%) and the true action potential of signal projection found among the stage 3 neurons associated with about 5% of the total neuron population.

NEURON is only a basic program suitable for entry level pedagogy. The discussions of this chapter suggest Neuron be re-written to incorporate multiple kernals in order to represent the major classes of neurons more completely, particularly with respect to temperature and signal delay.

2.9.3.1 Modification of the symbology in the program, NEURON

NEURON treats all of the neurites and axon as simple cylinders. It does not recognize the coaxial cable structure of the long axons of stage 3 neurons. It does not recognize the saltatory character of the signals along the axon of a stage 3 neuron due to the regeneration of the

---

[119]Moore, J. & Stuart, A. (2004) Neurons in Action: Computer Simulations with *NeuroLab*. Sunderland, MA: Sinauer Assoc.

[120]Carnevale, N. & Hines, M. (2006) The NEURON Book. NY: Cambridge Univ Press

[121]Hines, M. & Carnevale, N. (1997) The NEURON Simulation Environment *Neural Comp* Volume 9, Number 6 pp 1179-1209

[122]Hines, M. & Carnevale, N. (2001) NEURON: A Tool for Neuroscientists Neuroscientist vol 7(2), pp 123–135

signal by Nodes of Ranvier. As shown in this work, the complete solution of both the generator potential and action potential are now known and available in closed form.

By selecting the alpha function for use in its kernal, NEURON employs a simplified equation of the generator potential rather than the action potential. The generator potential (Eq. 2.5.3-1) is described by an equation more complex than the alpha function (Eq. 2.5.3-2) as shown in **Section 2.5.3.5**. The alpha function does not describe an action potential as used among the stage 3 signal projection neurons (see **Section 2.6**).

The following comments are only for discussion leading to a more advanced version of NEURON. Such an advanced version does not appear to be imminent; the home web page[123] has not been updated since August 19, 2009 and the comments from 2012 (although the web page copyright has been updated to 2013). A variety of guides and tutorials have been assembled[124]. These do not appear to make major advances in the program over the Carnevale & Hines guide. They are primarily concerned with minor modifications to the underlying code to make GUI operation simpler. These documents suggest significant changes to the kernal used in the program stored on clients computers should not be made without adequate reason.

NEURON employs a kernal designed to only generate a pulse waveform describable as a pseudo-action potential, ala H&H, in response to one or more pulse shaped inputs of the same basic form (the specified alpha function). The initial stimulation is described as a parametric current injected into the soma (fig. 4.1 of the 1997 paper). Although the GUI screen describes a potential variety of input shapes under "SelectPointProcess," these are not described in detail in the Carnevale & Hines guide and do not appear to include simple sinusoidal waveforms and step inputs of either polarity.
When addressing their nominal neuron, not including the more complex signal generation neurons, which are clearly beyond the scope of NEURON, it is appropriate to re-label the basic functional diagram of that program as supported in the guide to that program on page 11. **Figure 2.9.2-1** shows the alternatives. Frame **A** shows the original variant that may be interpreted as the basilar input having a preferred relationship to the axon compared to the apical input. It does not indicate the polarity of the apical and basilar input terminals with respect to the axon output (which is always positive going). Frame **B** has been modified to indicate more clearly the independence of the basilar and apical inputs and their respective polarities relative to the output at the axon. Alternate labels have also been provided to more clearly identify the nature of these input terminals. This variant would be more appropriate if NEURON could in fact accept analog input waveforms and generate an analog output as do 95% of all neurons. However, as configured, NEURON cannot address the operation of analog neurons. In addition, it does not address the propagation of axon pulse signals along the *necessarily* myelinated axon or their regeneration at Nodes of Ranvier. Frame **C** suggests a schematic that allows the impedance of the poditic input channel to be set and indicates clearly that the axon is or can be myelinated. The presence of the poda impedance indicates the neuron is configured to generate either pseudo- or real action potentials (depending on the equations actually available for the kernal). The poda impedance also sets the threshold potentials of the neuron (both dendritic input and axon output threshold potentials). The absence of this impedance would suggest the circuit can only emulate analog circuits (again, if the appropriate equations were implemented in the kernal). By controlling the degree of myelination, the program could indicate the importance of myelination in stage 3 neurons generating real action potentials.

---

[123] http://www.neuron.yale.edu/neuron/

[124] http://www.neuron.yale.edu/neuron/docs

The proposed modifications are compatible with more modern interpretations of the neuron as shown in [**Figure 2.1.1-1**, modified from Byrne & Roberts, and in figure 1(left) on page 375 of Ramachandran[125].

Even these suggested changes would require a major architectural change in the kernal of NEURON along with major changes to a variety of its drop-down menus. It might be more efficient to create a totally new program using the GUI architecture to maintain a degree of similarity for the benefit of current students and researchers using NEURON. The new program would employ separate full kernals for the generator potential and the action potential that would be functions of temperature and provide a delay between the time of stimulation and the output waveform. The program would also accommodate the more sophisticated propagation of the signal instead of the present axonal transmission by ionic conduction. This would involve replacing the d-lambda parameter of the present program with a more realistic limit on the axon length before regeneration.

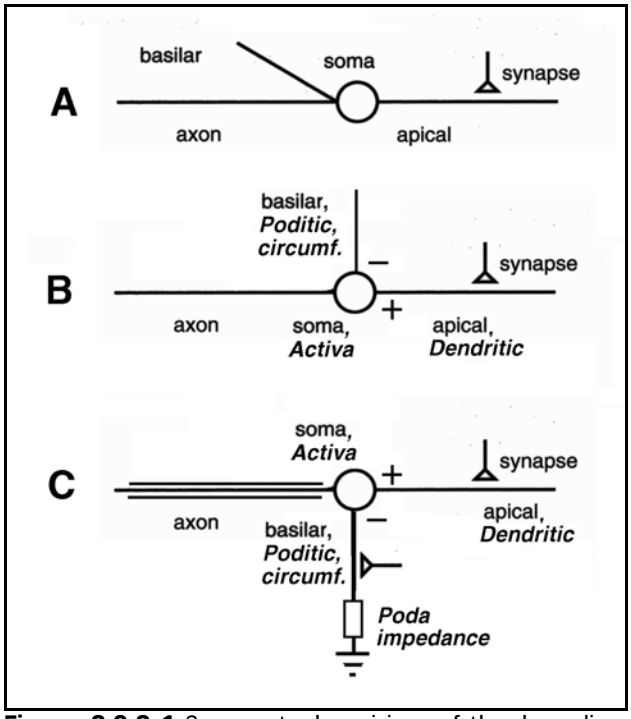

Figure 2.9.2-1 Suggested revision of the baseline neuron in NEURON. NEURON uses the unconventional notation of signal flow from right to left. A; the schematic used in NEURON. B; the schematic modified to isolate the basilar neurite from the axon more clearly and identify its polarity. The configuration is implicitly analog and does not generate action potentials. C; the schematic modified to explicitly support a stage 3 neuron generating action potentials. See text.

Chapter 10 of the guide discusses the implementation of "graded (chemical) synapses, gap (electronic) junctions and ephaptic interactions between neurons." However, they do not address the physiology of these synapses in any detail but focus on modeling a synapse as an RC circuit of largely undefined elements. (figure 10.1), all based on a two-terminal synapse. When discussing the synapse, they focus only on their assumption that the current into and out of the junction must be equal (technically they are not–based on the physical system and the three-terminal model). The presynaptic terminal is the pedicle of the stimulating axon. Reconfiguring their two-terminal synapse to a three-terminal synapse would improve their representation with minimal difficulty.

2.9.3.2 Recommendation regarding the program, NEURON

The 2006 version of NEURON only addresses the neuritic tree of the neuron (providing both an apical (axial) dendritic input and a basilar (circumferential) poditic input leading to the generation of an action potential. It does not address the direct relationship between the two with regard to stimulating and suppressing the generation of action potentials (the fact they are differential inputs to a common internal mechanism associated with a biological transistor, Activa, circuit). It relies upon the general description of the elements of the apical and basilar neurites as developed by Rall; that is, it treats them as fluid filled cylinders formed by the neurolemma. and exhibiting only resistance and capacitance. Their modeling does not support the presence of diodes in the electrical analogs of their neuron (page 45). While they incorporate an ideal amplifier in their list of test equipment, they do not incorporate the ideal

[125]Ramachandran, V. *ed.* (2002) Encyclopedia of the Human Brain. San Diegeo, CA: Academic Press vol 3, page 375

amplifier with differential inputs into their neural model. The label ideal amplifier is more appropriately an ideal operational amplifier in engineering notation. Their assumption was that all charge transfer between given points is by ionic conduction.

The 2006 version of NEURON relies upon what it describes as the "alpha function" (page 4) which is in fact the Poisson Equation of the 2nd kind (sometimes called the Kelvin Equation or the Heat Diffusion Equation. It contains no delay term or temperature term as developed and confirmed in this work. It is actually a degenerate version (Eq. 2.5.3-2) of the generator potential described empirically by H&H and developed physiologically in this work (Eq. 2.5.3-1). The full equation includes a significant temperature parameter that is different for the leading and trailing edges of the generator potential due to the different mechanisms involved in generating these segments of the waveform.

The 2006 version of NEURON does not address the axon of the biological neuron in any significant way (cartoon on page 93). It assumes all neurons generate pulse outputs instead of the more realistic value of less than 5%. While they provide a cartoon of what future versions of NEURON might address, it does not address the myelination of the axon, the division of the axon into segments separated by Nodes of Ranvier (NoR), the character of the Node of Ranvier and it does not address the electromagnetic propagation of energy along the axon and axon segments according to the General Wave Equations (GWE) of Maxwell. The program does not recognize the character of the axon as a coaxial cable. There is no mention of the critically important inductance of such a coaxial cable. There is no distinction between the phase velocity of the energy traveling along the axon segments nor the delay intrinsic with the regeneration of the action potential at the NoR, or the average velocity resulting from the combination of the axon segment and the NoR. They use the term node in the sense of the node of a mesh and suggest axons can be up to at least 1000 microns long without employing any regenerative mechanism along its length. They do not appear to assign any specific function to the soma of the neuron (page8), treating it as the root of one or more branched dendritic tree.

The waveforms shown on page 120 of the 2006 text are both analytic and numeric solutions of the generator potential limited to the Hodgkin Condition. They do not reflect the actual and detailed shape of the action potential waveform. They are entirely arbitrary with regard to the time constant used.

While a useful pedagogical tool for beginners, NEURON does not provide a realistic mathematical model of the neuron nor waveforms describing a real neuron as a function of temperature or stimulation intensity, whether of the analog or pulse generating class. Neither does it compute the actual delay associated with the neuron for either the pulse neuron (prior to reaching the threshold level) or analog neuron. Graduate students should be exposed to more sophisticated models of the neuron than available in the current incarnation of NEURON.

> ***The admonition of the previous section still applies. Any model of the neuron that does not recognize the effect of temperature on the operation of the neuron should be discarded as an unrealistic model of the physical system.***

END

2.5 Chapter summary DROP or REORDER BELOW HERE

2.4.1 Summarize the neuron as an electrolytic component in a circuit found in every neuron

This chapter has shown how an active electrolytic semiconductor device, the Activa, can be formed within and between living neurons. It has also shown how the Activa can be combined with other electrolytic, but otherwise conventional electrical, circuit elements to form circuits called conexuses. It has postulated that the neuron consists of multiple electrically isolated

conduits. Finally, it has provided a cursory overlay of the topology of this circuitry onto the multiple-conduit cytology of a neuron.

At a larger scale, it has shown that the fundamental neural signaling path consists of a series of passive electrical conduits interdigitated with conexuses containing Activa. This organization has shown that the synapse between neurons and the conexuses within neurons are fundamentally alike. This chapter has also postulated that the conexus is the fundamental physiological unit of the biological neural system instead of the morphologically defined neuron.

All of the above functional elements have been described in their entirety using only electrical and quantum-mechanical terminology and phenomenology. There has been no need to call upon chemistry to describe the functional (signaling) aspects of the neuron. As in Chapter one, the biological membranes of the neuron have remained impermeable to ions and small molecules of all types. Only the metabolic aspects of the neuron related to growth and respiration and the generation of electrolytic power have relied upon chemical processes.

The chapter has also postulated that the electrical power required by the neuron is derived from an electrostenolytic process that supports each electrical conduit of the neuron separately. The chapter went into more detail concerning the electrical properties of the active device found within all neurons, the Activa. It then described a series of electrical circuits formed from the basic conexus within a neuron. Finally, the chapter described a series of functional electrolytic circuit building blocks that can be easily formed from the basic conexus within a neuron. The next chapter will discuss how these building block circuits are actually used in a variety of common neurons.

The postulates offered in this chapter will be justified in greater detail in the following chapters. However, the basic premise is clear, the neural system of all animals is electrolytically based. The Electrolytic Theory of the Neuron provides a comprehensive and unrivaled explanation for the operation of a wide variety of individual neurons and synapses, as well as the overall neural system.
The chapter also surfaced a variety of important but subtle operating principles applicable to the neuron.

2.3.6.1 Absence of resistors in biological circuits

It is important to reflect on the fact that the above equivalent circuits of neural activity have completely avoided the symbol for a variable resistor with its implied external control mechanism. By replacing these symbols by the more appropriate diode symbol, the element is recognized for its variable but completely programmed change in impedance as a function of applied voltage.

It is also important to note that the <u>electrical potential of the plasma enclosed by a membrane has been changed relative to the matrix without any change in the permeability of, or the transport of any ions across, the conduit membrane</u>.

A change in plasma potential within a membrane to a more negative value with respect to its quiescent value is seen to be caused by transistor action and not by the “excitability of the membrane.” The instantaneous potential returns to its quiescent value through either of two processes. Current can be injected into the subsequent conduit through a synapse or it can be used to reverse the electrostenolytic process and regenerate the reactants used to power the neuron. A corollary to this situation is that <u>the ionic concentration of the plasmas within and adjacent to a neural conduit do not change in the short term and play no role in the signaling function</u>.

No conventional, power dissipating, resistors are found within the neural system. The transport delays associated with diffusion of charge through an electrolyte play a role similar to that of a resistor in more conventional (non-electrolytic) circuits.

As noted by Yau[126] based on the data he presented from Luttgau, changes in the concentration of Ca^{2+} and Mg^{2+} within the intracellular medium do not affect the current versus voltage characteristic of the typical plasma membrane *in-vivo*. Such changes would have negligible impact on the operation of the reverse biased axonal plasma membrane. However, his analysis was incomplete. Such changes could have a significant impact on the performance of the forward biased emitter to base portion of the neural circuit. By impacting the dendroplasm to intracellular potential, such a change would significantly impact the current injected into the axoplasm by the Activa.

The electrical potential of the plasma within a membrane conduit can be adjusted by changing a number of circuit parameters, including the intrinsic electrostenolytic potential. The intrinsic electrostenolytic potential can be changed by using different members of the glutamate metabolic cycle as reactants in the electrostenolytic process on the surface of a given membrane.

2.3.6.2 Electrochemical support by region

The division of the external membrane of a conduit into regions with distinctly different electrical characteristics appears to be a fundamental design parameter of the neural system. By making adjustments in the molecular makeup of the individual bilayers of the regions of a membrane, unique electrical parameters may be easily obtained for these regions.

Although the literature does not provide sufficient detail, it appears that the electrostenolytic support to the individual conduits of a neuron occurs at regions of type 2 membrane specifically tailored to optimize this support.

2.3.6.3 The lack of requirement for ions to pass through the cell membrane

A totally unexpected result of the analysis in this work is the lack of a requirement for ions to pass through the exterior membranes (generally type 1 and type 2) of the conduits of a neuron for signal related purposes. It appears that the movement of ions through type 3 membranes is entirely for the purposes of genesis and metastasis. The hydrophobic core of the type 1 and type 2 BLMs completely blocks the short term flow of ions through the membrane. **No ionic currents are required for the signaling operation of the neurons.**

2.3.6.4 Confirmation of the switching characteristic of the oscillating neuron

The use of the binary switching functions, h, m & n in the unsolved partial differential equations developed by Hodgkin & Huxley, and used by most subsequent modelers, introduce switching points that are not otherwise identified in their numerical integrations. These switching points are the same as those defined by explicit events in the Electrolytic model of the neuron.

2.5 A recapitulation of the underlying mechanisms used in the neuron

2.5.1 TRANSITION FROM AN AXON-ONLY TO A JUNCTIONAL-TISSUE MODEL

While an axon can be described as an axolemma enclosing an axoplasm, the axolemma exhibits access to more than one "surrounding medium." It is in communications with the surrounding extracellular medium. It is also in communication with other intracellular media. Any equation describing the electrical potential of the axoplasm must take all of the access ways into account.

While it may appear premature, the two previous figures will prove crucial in demonstrating that the operation of every neuron is based on the quantum-mechanical mechanisms occurring within the junction area defined in the previous two figures. This junction area formed by two

---

[126]Yau, K. (1994) Phototransduction mechanism in retinal rods and cones, *Invest. Ophthal. & Vis. Sci.* Vol. 35, no. 1, pp 9-32

regions of type 2 BLM in close juxtaposition is the source of the gain mechanism crucial to the operation of every neuron.

The initial goal of this work was to model the neural system in sufficient detail as to define its input parameters relative to the photoreceptor cells of the visual system. The intent was to model the photoreceptor cells more intensively based on the findings related to the simpler neurons of the neural system. The analytical and system analysis tools used will be discussed in **Chapter 7** were they are first employed. The procedure was to look closely at the neurological database and attempt to define the basic functional stages of the neural system. Particular emphasis was placed on the data available concerning the S-plane (see **Chapter 8**), the neurons immediately behind the photoreceptor cells in the signaling chain. It became clear that the so-called bipolar neurons of the retina were one of the simplest types of neurons. Effort was concentrated on modeling this type of neuron. Initially, the neuron was assumed to contain a generic operational amplifier in the language of the electrical engineer. A variety of different types of operational amplifiers were examined to determine which type exhibited characteristics most closely matching the bipolar neuron. The input and output impedance levels appeared to rule out amplifiers based on field-gate technology. They were more compatible with junction-gate technology. The voltage levels involved also appeared more compatible with junction-gate technology. Although there was little precise data available concerning the input or transfer impedance of the cells, there was good data on the output impedance. This data showed the amplifier to have an output impedance identical to that of a reverse-biased diode. Combining the output impedance data and the voltage normally associated with the output strongly suggested the output amplifier of the bipolar neuron could be modeled by a PNP type junction transistor operating in the common base mode. The challenge was to define the rest of the circuitry within the bipolar neuron. The key feature was the recognition that the bipolar neuron acted as an impedance changing device but did not exhibit significant voltage amplification. Such performance could be achieved using only a single PNP type semiconductor device combined with a few other electrical components. This combination of a putative active device, an Activa, within a bipolar neuron, combined with a few other electrolytic components defines the conexus within the neuron. It turns out the conexus, not the neuron, is the basic electrophysiological (functional) element of the neural system. This fact will be demonstrated in this and following sections.

> Sigworth has recently published a brief philosophical discussion suggesting field-effect type of transistors occur within the neural system[127]. He describes himself as one of the proponents of the ion-channel approach to explaining the neuron. His thesis was all-encompassing when he says the putative "Voltage gated ion channels control electrical activity in nerve, muscle and many other cell types." He did not provide any quantitative performance data that showed how such a field effect device actually works in the electrolytic environment of the neural system. He does present an interesting rhetorical question. "What structural design would allow so many charges to move so far, crossing the 30 Angstrom thick, electrostatically hostile interior of a cell membrane?" While potentially hostile to the transfer of ions, the membrane is well known to form a diode that is quite amenable to electron transport–in one direction. Sigworth concludes with a list of fundamental questions that need to be answered before the concept of an ion gate can be described as a field-effect transistor.

The above analysis led further. It showed, as illustrated in [**Figure 2.2.2-1**], that the configuration of the junctional-tissue between two neurons was largely indistinguishable from the configuration of the junctional-tissue between the dendrite and the axon within a neuron. As a result of further analysis, to be presented in **Chapter 3**, a stunning conclusion appeared. It became clear that the synapse was another form of conexus built using the three-terminal Activa defined above. **All synapses are in fact active semiconducting devices acting as low loss current transfer devices** (see **Section 2.4.3**).

> **The discovery that all neurons and all synapses contained at least one active electrolytic semiconductor device provided an entirely new foundation on which to build a broader understanding of the neural system**.

---

[127]Sigworth, F. (2003) Life's transistors *Nature* vol. 423 pp 21-22

2.5.1.1 Rationalizing the axon-only versus the junctional-tissue models

Since the constrained analyses of Hodgkin & Huxley in the 1950's, the axolemma of a neuron has been considered the key active element in the neurological system. This axolemma has been modeled as a two-terminal electrical network of varying degrees of complexity. However, these axon-only models have not proven satisfactory and have not explained the roles of the other neurites of the neuron. A large cadre of investigators have not been able to explicitly define the mechanism controlling the variable impedance(s) shown in these axon-only models. Finally, the two-terminal axon concept has not led to progress in understanding the overall operation of the neural system. It has been unable to explain the signaling mechanism found between neurons. It has also failed to explain the subtraction process involved in creating the signals observed at the S-plane of the retina. This situation has led other authors to question the adequacy of the basic two-terminal assumption associated with the axon only ideology.

It has also been common for authors to attempt to explain the operation of the neural system based entirely on chemical processes. This appears to be primarily due to the academic training of the authors and the ubiquity of certain chemicals near elements of the neural system. However, this ubiquity has not provided insight into the mechanisms employing these chemicals. The current concept of neurotransmitters is a particularly awkward one in the neuroscience literature. It can be questioned on many grounds. The fundamental chemistry associated with signaling within a neuron will be explored further in **Chapter 4**. It leads to a totally different view of the chemical role of the putative neurotransmitters.

An alternate unconstrained analysis, summarized above and diagramed in **Figure 2.1.1-1**, has led to a fundamentally different "junctional-tissue" ideology. At a top level, this ideology focuses on the junctional-tissue between conduits within a neuron as the location of the active mechanism within the neuron. At the next lower level, the ideology focuses on the junctional-tissue as forming a unique three-terminal electronic component. At a functional level, this single three-terminal device is seen to be ubiquitous throughout the neural system. This three-terminal device can be shown to be the biological equivalent of the man-made transistor. It is a PNP type electrolytic liquid-crystalline semiconductor devices named an Activa. This ideology expands to describe three-terminal Activas located at multiple locations along each neural signal path. These locations are both within and between (outside) individual neurons.

The three-terminal junctional-tissue ideology leads to radically different interpretation of the chemicals found in and adjacent to the neurons. Many of them are bio-energetic materials associated with metabolism in other parts of the body. They are particularly associated with the well-known glutamate cycle of metabolism. These materials are well suited to participation in an electrostenolytic process at the surface of the neurons designed to provide electrical power for signaling instead of chemistry-based signaling. **Section 2.7** will expand the chemical mechanisms available under the junctional-tissue ideology that lead to a complete understanding of the synapse as presented in **Section 2.4**.

The following sections will proceed to define the detailed features and proposed operation of the fundamental neuron containing an Activa. **Chapter 3** will address neurons of greater functional complexity. **Chapter 5** will address the morphological packaging and physiological operation of complete neurons based on the junctional-tissue ideology and the Activa hypothesis. Following these chapters, the reader can make an independent judgement concerning the competitive merits between the axon-only and the junctional-tissue ideologies. The material of **Chapters 8** through **12** will describe the operation of the entire neural system based on the junction tissue ideology and Activa hypothesis.

2.5.1.2 The junctional tissue as the conexus within a neuron

As developed above and expanded upon in **Section 2.3**, the performance of the individual bipolar neurons suggests they contain a very simple electrical circuit (a conexus) that contains a single active semiconductor device (an Activa) as its centerpiece. This assumption has proved to be entirely satisfactory in the case of all signal manipulation neurons and has led to a detailed understanding of the more complex types of neurons. Such semiconductor devices are

described as three-terminal devices. The fact they are three-terminal devices suggests the internal construction of the neuron is more complex than previously recognized. Two of these terminals are connected to a dendritic conduit and an axon conduit respectively. The third terminal is connected to a newly defined element, a poditic conduit. The nature and characteristics of this conduit will be discussed briefly in [**Section 2.2.6.1**] and presented in detail in **Chapter 3**.

Both projection neurons and many signal detection neurons are found to contain multiple active devices. All of the Activas found within these neurons are found in areas composed of junctional tissue.

2.5.1.3 The junctional tissue as the conexus between neurons–the synapse

As suggested by [**Figure 2.2.2-1(D)**], the synapse between two neurons appears cytologically identical to the conexus within a neuron. They both occur in areas of junctional-tissue. While there is a functional difference between an internal conexus and the synapse, the difference is defined primarily by the electrical biases supplied to the three terminals of the Activa within each conexus. The operation of the synapse is described in detail in **Section 2.4**.

2.5.2 TRANSITION FROM A DUAL-ALKALI TO AN ELECTRON-BASED MODEL

The previous sections have portrayed the neuron in an entirely different light than that proposed by the Dual Alkali-ion Diffusion Theory. Under the junctional-tissue ideology, the operation of the neuron is based entirely on the flow of electrons into and out of a variety of enclosed plasma conduits. These conduits are impervious to the sodium and potassium ions of the Dual Alkali-ion Diffusion Theory. Under this Electrolytic Theory based on the junctional-tissue ideology, the neuron is fundamentally an electrolytic device (or circuit) capable of performing a variety of electrical signal manipulations similar to man-made transistor circuits. This performance is achieved by exploiting the conexus (combined Activa and other electrolytic circuit elements) within the neuron. It is the exploitation of the analog device, the Activa, within the fundamental neuron that gives the neural system its great flexibility and overall capacity.

The Dual Alkali-ion Diffusion Theory is unsustainable in the presence of the superior Electrolytic Theory.

There have been many papers describing the shortcomings of the alkali ion current theory of the neuron. Connors & Stevens[128,129,130] explored the shortcomings of the Hodgkin & Huxley model. To achieve a more rational fit between the data and the proposed flow of alkali ions, they introduced an additional A-current that was transient. They noted an inward current persisted in the absence of sodium ions in the artificial sea water (pg 16).

The Electrolytic Theory has explained the operation of a neuron in ways the Dual Alkali-ion Diffusion Theory cannot even address. The following sections of this Chapter and **Chapter 9** will exploit the Electrolytic Theory even further to explain additional details of the operation of individual neurons. Chapters 11 through 15 will exploit the Electrolytic Theory even further to explain the operation of the entire neural system at a very detailed level.

---

[128]Connor, J. & Stevens, C. (1971) Inward and delayed outward membrane currents in isolated neural somata under voltage clamp *J Physiol* vol 213, pp 1-53 (three papers)

[129]Connor, J. (1977) Time course separation of two inward currents in molluscan neurons *Brain Res* vol 119(2):487-92

[130]Connor, J. Walter, D. & McKown, R. (1977) Neural repetitive firing: modifications of the Hodgkin-Huxley axon suggested from crustacean axons *Biophysical J* vol 18, pp 81-102

Table of Contents 1 August 2016

Chapter 2 List of Figures 8/1/16

(Active) SUBJECT INDEX (using advanced indexing option)